The Wireless World
THE PRACTICAL RADIO JOURNAL
24th Year of Publication

No. 801. FRIDAY, JANUARY 4TH, 1935. VOL. XXXVI. No. 1.

Proprietors: ILIFFE & SONS LTD.

Editor:
HUGH S. POCOCK.

Editorial,
Advertising and Publishing Offices:
DORSET HOUSE, STAMFORD STREET,
LONDON, S.E.1.

Telephone: Hop. 3333 (50 lines).
Telegrams: "Ethaworld, Watloo, London."

COVENTRY: Hertford Street.
Telegrams: "Autocar, Coventry." Telephone: 5210 Coventry.

BIRMINGHAM:
Guildhall Buildings, Navigation Street, 2.
Telegrams: "Autopress, Birmingham." Telephone: 2971 Midland (4 lines).

MANCHESTER: 260, Deansgate, 3.
Telegrams: "Iliffe, Manchester." Telephone: Blackfriars 4412 (4 lines).

GLASGOW: 26B, Renfield Street, C.2.
Telegrams: "Iliffe, Glasgow." Telephone: Central 4857.

PUBLISHED WEEKLY. ENTERED AS SECOND CLASS MATTER AT NEW YORK, N.Y.

Subscription Rates:
Home, £1 1s. 8d.; Canada, £1 1s. 8d.; other countries, £1 3s. 10d. per annum.

As many of the circuits and apparatus described in these pages are covered by patents, readers are advised, before making use of them, to satisfy themselves that they would not be infringing patents.

CONTENTS

	Page
Editorial Comment	1
Holland's Empire Station	2
The Bulb of Many Uses	4
Field Strength Measurement	6
Listeners' Guide for the Week	10
Hints and Tips	12
Radio Communication	13
News of the Week	15
Marconiphone Radio-gramophone, Model 292	16
Unbiased	18
Broadcast Brevities	19
New Apparatus Reviewed	20
Foundations of Wireless, VII	21
Principal Broadcast Stations	23

EDITORIAL COMMENT

Broadcasting's Most Urgent Need

Wider Frequency Separation

A STAGE in the design of receivers for broadcast reception has been reached where further progress is no longer possible until changes are made in the system of broadcast distribution. Receivers are available capable of extremely high quality of reproduction, but, except under unusual and most favourable conditions, the full advantages of their capabilities cannot be realised, owing to the narrow frequency band transmitted or the proximity of other transmitting stations.

The frequency range transmitted by the best stations of the B.B.C. is at least equal to that of any transmitters elsewhere in Europe, or, indeed, in the world. Really good reproduction, to be satisfying, should cover a range of about 30-13,000 cycles, but the B.B.C. is far behind this. Unless we are favourably situated near a B.B.C. station, we cannot even enjoy the range at present transmitted without the risk of adjacent-channel interference. It is certainly no use, under present conditions, for the B.B.C. to try to improve much upon their present quality.

The remedy is obvious. It will be necessary, before any real progress can be made and before present technique of receiver design can be utilised to advantage, for the frequency band to be widened at the cost of eliminating a number of stations.

But, unfortunately, all countries in Europe do not at present agree on the question of quality and prefer to compromise. They are content to transmit a much narrower band of frequencies than is required, even for passable quality. This being so, it ought surely to be possible to devise a scheme for wavelength distribution where those countries desiring to improve the quality of their transmissions could do so without being penalised by the attitude of less progressive nations.

If all countries could agree to the necessity for a wider transmission band for each station, the problem would be solved, but since this seems to be an unattainable goal at present we must look elsewhere for a solution of the problem.

The Solution?

We are thrown back, then, on to a suggestion which has been put forward in *The Wireless World* from time to time, that instead of distributing wavelengths amongst the various countries on the present lines so that stations of different nationality jostle one another in all too intimate contact, each country should be allotted a definite band or bands of wavelengths exclusively for their own use. This would mean that, having gained possession of these wavelengths, each country could please itself as to whether the bands were crammed with a large number of stations transmitting poor quality or a limited number putting out the highest quality possible.

Designers and manufacturers of broadcast receivers are marking time; they have the knowledge available to produce sets capable of extremely high quality reproduction, but they are at present deterred from doing so because, under existing conditions, the general public would not be able to take advantage of their possibilities.

Quite definitely the next step towards improving the standard of reception must come from those responsible for wavelength distribution, and some radical change is already overdue.

Holland's Empire Station

The New Short-wave Service at Huizen

IN colonial broadcasting Holland has always led the way, a short-wave service to the Indies having been in operation at Eindhoven seven years ago. This description of the newly designed Philips short-wave station at Huizen shows that the early tradition is being more than maintained

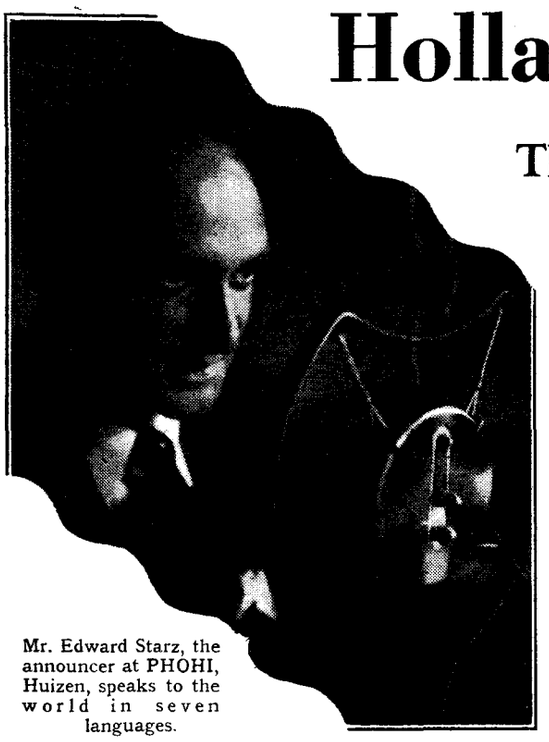

Mr. Edward Starz, the announcer at PHOHI, Huizen, speaks to the world in seven languages.

SEVEN years ago a dramatic wire flashed into the office of the Philips Radio Laboratory in Eindhoven. It consisted of these four words: "We can hear you." This laconic message spelt the triumphant conclusion of years of patient experiment. It came from Bandoeng, in the East Indies, and signified that the experimental transmitter PCJJ had established communication by short-wave telephony between Holland and her Colonial Empire.

By this achievement Station PCJJ was placed on the road to success; and from the most modest beginnings the experimental transmitter developed into a noted radio station with a large listening public scattered all over the world. The little station received its due acknowledgment and reward when, on July 1st, 1927, the Queen of Holland visited the studio and spoke to her subjects through the PCJJ microphone, addressing a vast unseen audience divided between two hemispheres; one in the East Indies, where Holland has rich colonial possessions, the other in the West Indies, where there have been Dutch settlements since the 17th century.

A Permanent Station

The enthusiasm of the Dutch people at home as well as overseas was unbounded at the success of the broadcast. The question of a permanently established radio centre for the colonies was mooted. The PHOHI station came into being.

The station's strange name is formed from the first two letters of "Philips" plus the initial letters of the words "Omroep Holland-Indie," Holland-Indies Broadcasting. It is pronounced as a word: "fo-hee."

The experience obtained with the PCJJ transmitter was found most useful when the new transmitting installation was being designed and constructed.

Agrarian interests, shipping and oil companies, banks and commercial enterprises were quick to see the importance of the new transmissions to their employees, and they gave full support to the initiation and development of the project.

In the autumn of 1929 the first experimental broadcasts took place; they were transmitted on a wavelength of 16.88 metres, and with a power of 20 kilowatts, an expenditure of electrical energy regarded as considerable for an ultra short-wave transmitter even to-day. Results were good right from the beginning. A few months after the opening of the new station various American radio corporations relayed a PHOHI Christmas programme; and hundreds of letters of appreciation from American listeners reached Hilversum by the first mail-boat. Reception in the East Indies (the programme including a running commentary on a football match) was particularly good.

The home programmes did much to add variety and interest to the exile of many of the Dutch colonists in the Far East. "No other short-wave station," commented the East Indian journal of Commerce, the *Sœrabayan Handelsblad*, "can compete with PHOHI, either with regard to the technique of transmission or the choice of programmes." Indeed, the musical and artistic standing of the new station reached a high standard of excellence.

In spite of the efficiency of this particular station, broadcasting in general in Holland at this date had become erratic and chaotic. Active Government intervention was decided upon, and the innocent had to suffer with the guilty. The colonial station was closed down, and remained silent for two years. At length, after protracted negotiations and in response to urgent demands from the Indies, a compromise was effected, and the reopening of the station was arranged for the autumn of 1932.

The official inauguration took place in December of that year. But the general enthusiasm was somewhat tempered when

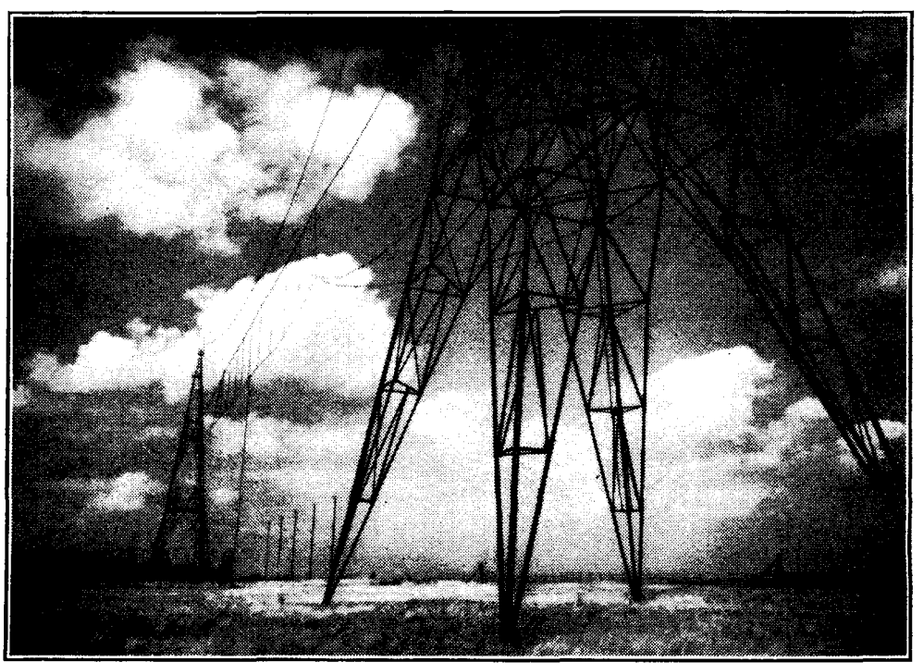

A portion of Holland's colonial station at Huizen. The nearer aerial is used by transmitter PHI, using a wavelength of 16.88 metres. A twin transmitter, PCJ, operates simultaneously on 19.71 metres.

Holland's Empire Station—

it became apparent that reception in the East was not up to the standard attained during the experimental period.

No efforts were spared to overcome the obstacles of the ether, and various experiments were attempted; the times of the broadcasts were changed—but with little result; then a second wavelength for winter operation was granted to the station. In January, 1933, broadcasting was discontinued while the station was reconstructed to allow for transmissions on the second wavelength. The experimental work began again in March, but this time not only with the ordinary wavelength of 16.88 metres, but also with the new winter wavelength of 25.57 metres. Results were exceedingly satisfactory, so that on April 16th, 1934, PHOHI officially resumed broadcasting, and once again its call letters PHI echoed round the world.

But the experts of PHOHI still pursue their quest after technical perfection. In a vast geographical entity such as the Indies it is inevitable that there should be complaints of imperfect reception from certain districts. In Northern Sumatra, for instance, listeners-in suffered from serious interference from a telegraphic transmitter. This was overcome by experimenting with two simultaneous transmissions on different wavelengths, PHI using 16.88 metres and PCJ using 19.71 metres.

The colonial broadcasting station and aerials are situated near the village of Huizen, on the Zuyder Zee, some 15 miles south-east of Amsterdam. The current supply is 10,000 volts 50 cycles.

The high-frequency part of the installation is in the middle, and the transmitter is crystal controlled. By the application in this stage of an ordinary receiving valve (A415) the crystal is only slightly loaded, which greatly strengthens the regular functioning of the transmitter. The frequency of the vibrations generated in the crystal stage are in the following stage multiplied several times in order to obtain the right wavelength. For instance, on the 16.88-metres wavelength the crystal stage is tuned on 135 metres. Before the frequency of the 67.5-metres wavelength is doubled, the vibrations are amplified by two parallel and connected 10-watt valves. The doubling takes place afterwards up to 33.75 metres, the highest voltage used in these stages being 400 v. But the following amplifying valves work under an anode tension of 2,000 v. The final doubling takes place in two 1,500-watt valves up to 16.88 m. When the high-frequency energy has once more been amplified by two parallel-connected 1,500-watt valves, fed by 4,000 v. DC, it comes into the last amplifier stages, consisting of two 10kW. water-cooled valves. The tension for this stage is 10,000 volts, and there is a current of 6 amp. intensity.

The power of the transmitter is thus 60 kW. and its output 20 kW. at 97 per cent. modulation.

The modulation apparatus is in another part of the building. The HT is obtained from two rectifiers supplying respectively 8,000 volts (3-phase rectification) and 14,000 volts (6 phase rectification). The total input reaches 130 kW.

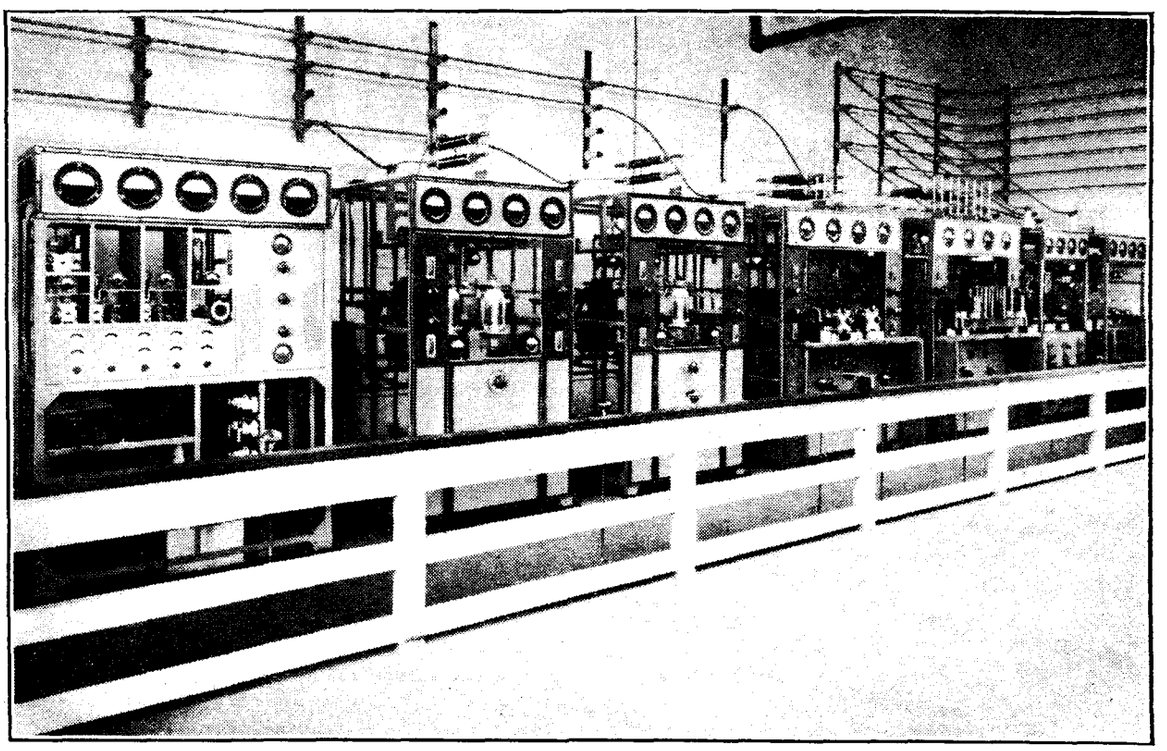

A general view of the PHI transmitter, which has been constructed on the unit system with facilities for quick adjustments and exchange of defective parts.

Advantages of the Beam

The control desk is in a central position, and the operator from his glass-enclosed perch can survey the whole installation. In case of emergency the whole transmitter can be put out of action by one movement of the hand.

The aerial system is of the beam type; in other words, it radiates in two directions only, east and west. This method ensures much better reception, both for the East and West Indies, than would be possible if a non-beam system were employed.

The principal studios of PHOHI are in Hilversum, whence most of the programmes are broadcast. There is also a special studio in Amsterdam for broadcast talks, and a studio in the Hague used for the concerts given by the Residentie Orchestra, which is the pride of the capital. For special occasions a music studio is fitted up in the actual transmitting station at Huizen.

The Programmes

Besides the Residentie Orchestra PHOHI has at its disposal an excellent orchestra of its own. Classical and modern compositions, light music and jazz, cabaret, running commentaries on football matches, general outdoor broadcasts—all have their place in the regular programmes.

Many events of national importance have to be recorded and rebroadcast from gramophone records at a more convenient hour, for the difference in time between Europe and the East Indies is about six hours; when it is 9 p.m. on Wednesday in Huizen it is 3 o'clock on Thursday morning in Batavia.

PHOHI specially prides itself on its news service; its bulletins are read by Mr. Edward Starz, who is able to address his vast cosmopolitan audience is no fewer than seven different languages.

The station's popular announcer is now making a tour of the East Indies to meet face to face some of the many thousands who know only his voice.

On the cultural side the station's aim has always been to bridge the gulf between Holland and her colonies, to form an enduring spiritual link between the Netherlands and the Dutch Colonial Empire, east and west.

The Bulb of Many Uses

Applications of the Cathode Ray Tube : Useful Auxiliary Apparatus

THIS is the first of a short series of articles on the use of this versatile instrument and some of its auxiliary apparatus. A certain amount of fundamental knowledge is assumed, and the articles are intended to give readers a broad idea of cathode ray methods from which they can, with little difficulty, apply the principles to their own needs.

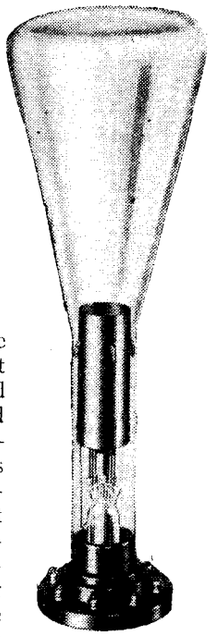

Cossor cathode ray tube in holder.

THE principles of the cathode ray tube are now fairly familiar to most readers, and its use in a vast field of research and experiment has been the subject of much technical writing. Its potentialities in television further make it an object of great current interest, and it is thought that a simple explanation of the tube and of some of its uses may be of value. An appreciation of the operation of the device will undoubtedly be of help in following the various television systems (of which it is hoped to give some account within the next few months), besides being of assistance to experimentally minded readers who may wish to use this remarkable diagnostic tool in their experiments.

Briefly, the tube itself consists of a three-electrode device, the purpose of which is to shoot a beam of electrons along the length of the containing bulb. A typical construction is shown diagrammatically in Fig. 1, where the filament, shown in the form of a simple U, is heated by current (from a battery or other source), while a high-tension voltage is applied between it and the anode. The latter electrode is usually in the form of a disc with a central hole. Electrons are liberated from the filament and drawn towards the anode, where some of them—indeed, a great many of them—arrive with sufficient velocity to shoot through the anode aperture. By attention to the length of the bulb and by adjustment of the degree of evacuation (and also by the use of a minute quantity of some of the other gases), it is possible to produce an ionisation effect along the bulb which keeps the electrons in a fine beam or jet. This process can, however, be greatly assisted by surrounding the filament by a "Wehnelt" cylinder, as shown in Fig. 1, and making the cylinder negative to the filament. This negative charge immediately exercises a constricting effect on the beam before it reaches the anode, thus making it easier to keep the beam in a fine pencil after passing through the anode aperture.

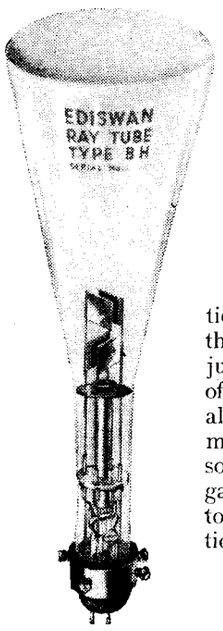

An Ediswan cathode ray tube.

The electron beam is then projected along the bulb until it meets the flattened end, the inside of which is coated with a material that glows or "fluoresces" under the influence of the electron impact, thereby producing a bright spot of light. Several different fluorescent materials are in current use for different colours of fluorescence. The most active visual material is zinc silicate or Willemite, which glows a bright yellow-green, to which the eye is most responsive. For photographic purposes, calcium tungstate, which glows a bright blue colour, appears to be the best material. Cadmium tungstate can also be used, and mixtures of these substances can be made to give a fluorescence fairly well suited for joint visual and photographic requirements, as is often required in experimental work.

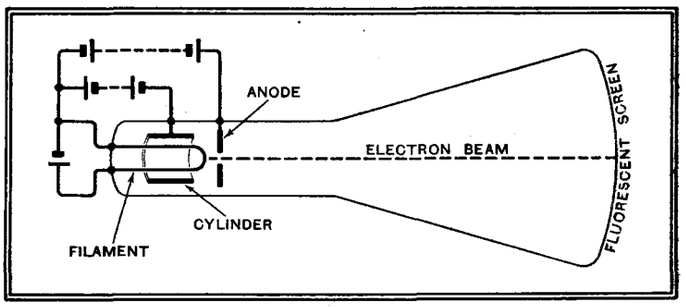

Fig. 1.—Production of the electron beam in a cathode ray tube.

The process of bringing the beam to a sharp point where it impinges on the fluorescent screen is usually described as "focusing" it. In practice, once the tube is made and its vacuum fixed by the maker, the process of focusing is done jointly by adjusting the filament current and the negative voltage on the cylinder.

The filament, cylinder, and anode system is frequently called the "electron gun," from its function in shooting electrons along the tube.

The description and illustration given are true of the general type of "soft vacuum" tube used for measurement and experimental purposes. This tube has certain inherent defects which render it less suitable for television, for which purpose a "hard" or highly evacuated tube is desirable. The focusing process is then rather different, since there is no help from ionisation within the tube, and focus is controlled in a number of different ways, mostly by auxiliary electrodes, additional to those described. These methods need not—indeed, cannot—be discussed in a general article such as this.

The purpose of the electron beam is to serve as an indicating device for whatever purpose we want to use it. Besides the "gun" system illustrated, therefore, the tube usually contains some means of deflecting the beam. These will be considered later, and, before we proceed to consider even the details of the "electron gun" circuits, it will be well to digress and review some of the actual uses of the tube.

Applications of the Tube

These uses are many and varied. The list given in the table at the top of the next page is extensive and typical, but does not claim to be exhaustive.

The list looks very formidable, but the applications can be classified into a few simple essential forms. These are (*a*) the delineation of phenomena against time, (*b*) the comparison of voltages for amplitude, phase or frequency, (*c*) the general plotting of cause and effect (e.g., by the production of voltages proportional to those qualities). For example, the essential form of (*a*) covers the applications listed in 1, 4, 6, 7, 8, 9, 12, 13, 15, 18, 20, 24, 25, 26, 27, 28, 32, 33; (*b*) covers the applications 2, 3, 14, 15, 16, 21, 22; while (*c*) covers the applications 5, 6, 10, 17, 23, 28, 29, 30, 31.

It is, perhaps, well to crystallise these essential forms at an early stage, since knowledge of them is of the greatest advantage in assisting the intending user to

SOME OF THE MANY USES OF THE CATHODE RAY TUBE

Radio Applications

1. Reception of radio signals.
2. Measurement of signal strength.
3. Visual direction finding.
4. Atmospherics.
5. Measurement of modulation.
6. Transmitter performance generally.
7. Echo sounding of ionosphere.
8. Television.

Audio Applications

9. Sound-film recording.
10. Microphone and loud-speaker testing.

Common Radio and Audio Applications

11. HF peak voltmeter.
12. Waveforms generally.
13. Transients.
14. Amplifier performance.
15. Efficiency of detection.
16. Comparison of frequencies.
17. Frequency characteristics of apparatus.
18. Efficiency of noise-suppressor devices.
19. Relay operations.

General Electrical Problems

20. Machine noise.
21. Phase problems.
22. Synchronisation.
23. Properties of magnetic and other materials.
24. Machine output (e.g., waveform)
25. Magneto and ignition-coil performance.
26. Smoothing.
27. Measurement of small time-intervals.

Mechanical Problems

28. Speed measurements and comparisons.
29. Impact measurements.
30. Mechanical distortions.
31. General problems where mechanical forces can be converted into electrical effects.

Medical Applications

32. Electro cardiograph.
33. Nerve reactions.

devise schemes to suit his particular requirements. It may also be of help to him in interpreting results when he has got them, since, in some cases at least, lack of clear thinking may prevent him appreciating all the information that is to be obtained from his observations. It will be noticed that certain applications fall into two of the three categories, according to the exact method used.

A previous article on the subject (in *The Wireless World* of April 6th, 1934) illustrated two very important accessories in the use of the tube, viz., a high-tension supply unit and a linear time-base unit. The former provides economically the high-voltage and low-current output necessary for the operation of the tube. The second is a very useful accessory, in some form or other, in most of the applications mentioned in (a). That illustrated in the previous article is one of the most flexible single units available, since it can be used over a wide range of frequencies and a wide range of "voltage swings" (i.e., amplitude on the tube screen), and can also be synchronised or locked to a recurrent phenomenon such as a steady waveform.

The cost of these items may, however, be somewhat terrifying to the amateur experimenter, and it is the intention of this article to illustrate and describe some inexpensive methods of constructing devices which, although perhaps less elegant than those formerly illustrated, are quite serviceable for many purposes.

The essential circuits of the "electron gun," or electron-beam-producing device, shown in Fig. 1, are given in Fig. 2 in association with the simplest possible type of HT supply unit. Although reference was made in the previous article to the use of a unit supplying up to 3,000 volts, with modern oscillograph tubes it is rarely that more than 1,000 volts are required except for the most rapid photographic applications and for television. For visual working of all kinds (except television) and with a suitable screen material giving the greenish fluorescence to which the eye is most responsive, 1,000 volts are usually sufficient.

The tube filament can be heated by AC or by battery, the latter being illustrated in Fig. 2. An ammeter should always be used in this circuit, and the filament current worked up gradually to the value stated by the maker. If this is not known, it should be worked up gradually to the lowest value necessary for focus, as although modern cathodes are fairly robust it is not wise to try them too severely.

Improvised HT Supply Unit

On account of the very small anode currents used, the HT supply unit can be of the simplest type, e.g., a half-wave rectifier with very simple smoothing. Again, on account of the low currents, the transformer can be a small one, the only qualification being that of good insulation between its windings. A transformer of ratio 3 or 4 to 1 can be used for the HT side (provided its insulation is good enough) to give a smoothed DC output up to about 1,000 volts. An old audio transformer can sometimes have its insulation improved by simple means and used for this purpose. The transformer heating the filament of the half-wave rectifier should also have good insulation between windings.

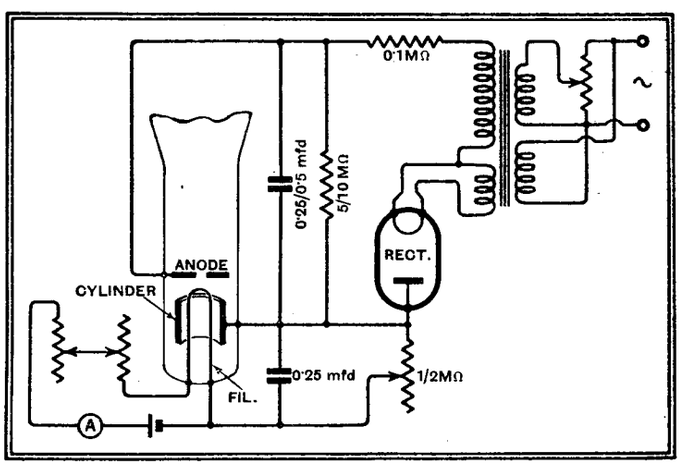

Fig. 2.—"Electron Gun" circuit of cathode ray tube.

The rectifier itself, as mentioned in the previous article quoted, is not critical. The volt-drop across it in the conducting direction is very small, but in the non-conducting direction it has practically the full peak-voltage of the negative half-wave, and its base and socket should be of good insulation for this reason. Cossor's make a special valve, SU2130, but an old triode (with grid and anode strapped together) is a good substitute, especially for operation at 1,000 volts or so. Even with about 1,000 volts as a working value, control of the HT output is very desirable so that the tube can always be operated at a lower voltage if circumstances permit (as frequently they do). The heavy-duty potentiometer across the primary of the HT transformer does this very well. The 0.1 megohm series resistance serves as a general protection, that of 5 to 10 megohms across the HT condenser acts chiefly as a discharging load when the tube is switched off.

The variable resistance of 1 to 2 megohms between cathode and cylinder serves the familiar wireless purpose of "free grid bias" to adjust the cylinder to the correct negative potential for good focus (in conjunction with the filament current).

A pilot lamp is a useful refinement if a suitable LT transformer winding is available, but a small neon lamp across the primary can also be used. Most tubes can now operate with AC on the cathode, and for this purpose another LT transformer might replace the battery shown in Fig. 2. Two rheostats giving a rough and fine filament control are desirable with either AC or battery, 4 ohms for the rough and 1 ohm for the fine being typical values. The beginner setting up a cathode ray tube and its accessories will mostly be influenced by the material he has available. The use of an ammeter in the filament circuit has already been emphasised, and if an ammeter has to be bought for the purpose a moving-iron instrument is recommended so that it can be used for AC or DC. High-tension volts can only be measured by an electrostatic instrument on account of the relatively large load imposed even by a high-resistance, moving-coil instrument, so we must generally take them "on trust." *(To be continued.)*

Introduction to Engineering, by R. W. J. Pryer, B.Sc. (Eng.), A.M.I.Mech.E., A.M.I.A.E., Lecturer in Automobile and Aeronautical Engineering, Loughborough College.—This book provides a preliminary course in mechanical and aeronautical engineering, and deals with steam engines of all types, internal combustion engines, the motor car, and the principles of flight. A chapter is devoted to workshop practice. Pp. 117+viii, with eighty diagrams. Published by Sir Isaac Pitman and Sons, Ltd., Parker Street, Kingsway, London, W.C.2. Price 2s. net.

Field-Strength Measurement

Design and Construction of Portable Equipment

By T. C. MACNAMARA (B.B.C. Installation Dept.)

THE apparatus described in this article is of relatively simple design, and is not beyond the scope of the keen amateur. In addition to its primary use for measuring the strength of incoming signals, it may be employed for measuring the sensitivity of receivers, etc.

SOME time ago the author of this article had occasion to carry out some field-strength measurements in connection with certain modified types of aerial to be employed for broadcasting. The majority of these measurements were relative to effective height, aerial efficiency, and signal distribution, and, as they were chiefly taken at no very great distance from the transmitting aerial, they did not necessitate the measurement of very small field-strengths, nor was a very extensive waverange involved. A portable set, consisting of a receiver and local signal generator, was, therefore, produced.

The two units, which are entirely separate and self-contained, have been found to have many other uses in the laboratory in connection with radio-frequency bridge measurements, generation of calibrated signals, receiver vetting, and the like.

The system employed by the apparatus is well known, involving the use of a receiver with a directional frame aerial, which is first oriented to receive maximum field-strength and then rotated through 90 degrees to receive minimum, whereupon the calibrated local signal generator is switched on, tuned to the working wavelength, and adjusted until the deflection of the receiver rectifier anode current meter is precisely equal to the deflection given by the distant station when the frame was set on the maximum bearing.

The EMF injected into the frame by the local oscillator is then equal to that due to the distant station; and, as the former can be accurately measured, the magnitude of the latter may be easily calculated in the following manner.

The EMF induced in a vertical frame aerial due to the horizontal component of a station working on broadcast wavelengths in volts is equal to the effective height of the frame multiplied by the signal strength in volts per metre. Conversely, the signal strength in volts per metre is equal to the induced EMF in volts divided by the effective height in metres. The effective height of a frame may be calculated from the formula—

$$H = \frac{2\Pi AT}{\lambda}$$

where H = effective height in metres,
A = area of loop in sq. metres,
T = total number of turns,
λ = wavelength in metres.

so that the effective height of any frame may be determined at the wavelength which it is desired to employ.

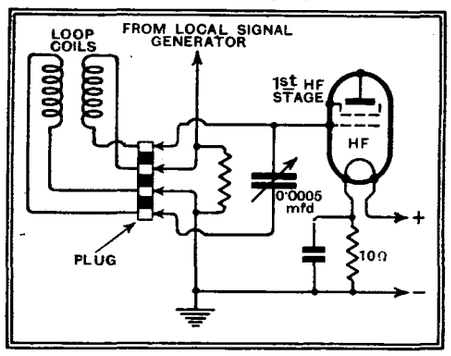

Fig. 1.—Input circuit of the reeciver, showing method of interchanging medium- and long-wave frame aerials.

The receiver, which consists of two screen grid HF amplifying stages and an anode bend detector, is provided with interchangeable vertical frame aerials, one metre square, each mounted on a plug consisting of a shouldered brass tube fitting into a substantial brass tubular socket having ample bearing length to give stability to the frame. The connections are taken through a four-way plug fitted to the end of the brass tube in such a way that it is not called upon to withstand any mechanical strain. The wavelength range over which the receiver is designed to operate is 200/500 metres and 1,200/2,000 metres, and to cover this range two frames are provided, one having a total of eight turns and one of thirty-two turns. The winding on each frame is in the form of a single layer, interrupted at the centre to permit of the introduction of a known non-inductive resistance. The whole winding is shunted with a 0.0005-mfd. tuning condenser, thus forming the tuned grid cir-

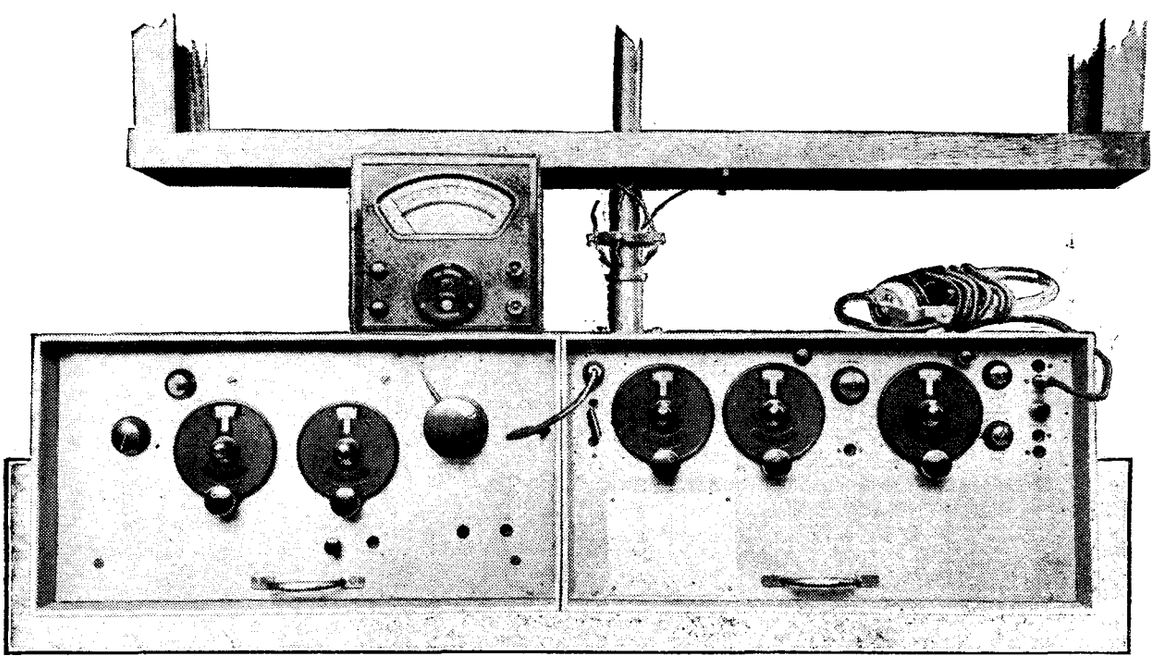

General view of apparatus, with loop in position. Oscillator on left, receiver on right. Controls (from left to right): oscillator; coupling control, wave-change switch, osc. tuning dial, coupled circuit tuning dial, attenuator; receiver; loop resistance selector plug, loop tuning dial, HF tuning dial, gain control, detector tuning dial, galvo shunt and balance.

Field-strength Measurement—

cuit of the first HF amplifying stage. It is desirable to earth the centre point of the frame in order that vertical components cancel out.

Reference to Fig. 1 will make the arrangements of the frame clear. From this point the receiver is conventional, all valves being of 2 volt 0.1 amp. type. The valve filaments are lit from a super-capacity 3-volt dry cell, the extra volt being dropped in resistances and employed for grid bias. The HT supply is from a very small-capacity 100-volt dry battery, a few volts being tapped off from the negative end to provide additional bias for the anode bend detector.

The only other unusual feature of the receiver is the provision of a detector anode current balance circuit by means of which the standing current may be cancelled, thus enabling a more sensitive meter to be employed for reading the change due to a signal. A galvanometer giving a full-scale deflection of 240 microamps. is employed, a 10-ohm variable shunt having an open-circuit position being provided to protect the meter until a balance is obtained. It should be mentioned that this galvanometer is also employed to read the output of the local signal generator in conjunction with a thermo-couple. The anode current balance circuit takes the form of a bridge arrangement as shown in Fig. 2. The galvanometer is connected by means of a plug and jack, and jacks are provided to enable anode current and filament voltage to be read for all valves by means of a universal meter. Telephones are also provided as shown.

The sensitivity of the set so described is such that with maximum gain adjustment a full-scale deflection of the galvanometer is given by a signal of 0.5 mV. per metre, on any wavelength between 200 and 500 metres, and approximately 2 mV. per metre on wavelengths between 1,200 and 2,000 metres.

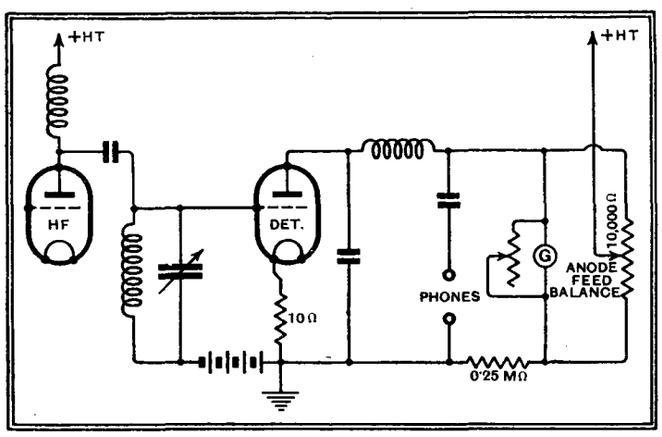

Fig. 2.—Arrangement for balancing-out the standing anode current of the detector valve.

Control of sensitivity is obtained by means of a variable 50,000-ohm resistance shunted across the input circuit of the second HF amplifier, an arrangement which has been found satisfactory in that selectivity increases with sensitivity and the attenuation is maintained smoothly until the receiver is subjected to an input resultant from signals with a field-strength in excess of 0.5 V. per metre.

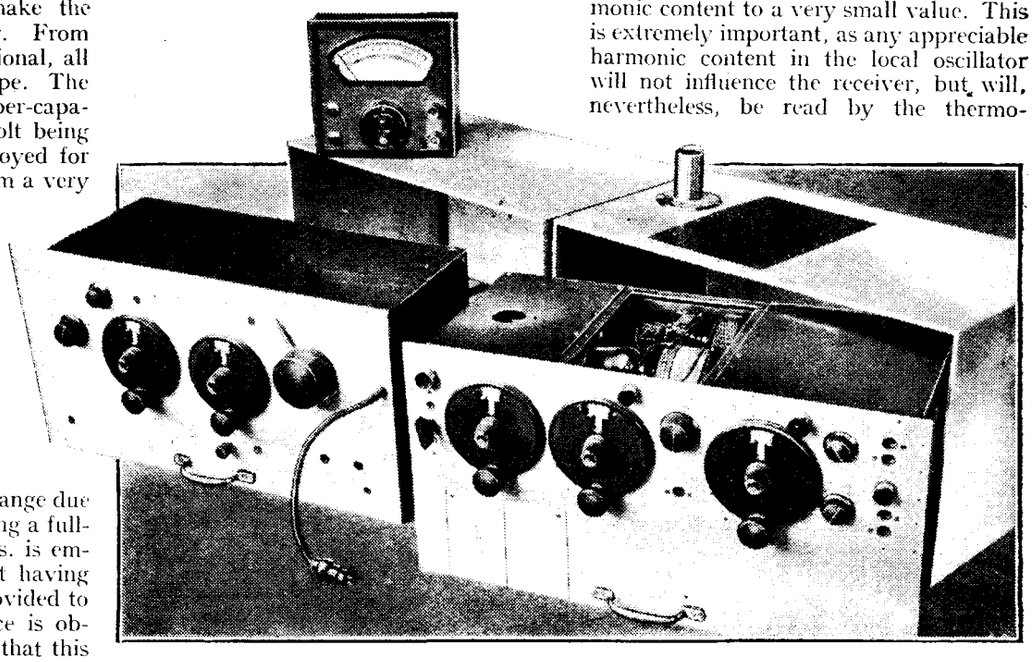

Front view of units removed from their cases.

Very considerable attention was paid to the internal screening; the receiver is totally screened and divided into three compartments by means of 24-gauge copper divisions, screw-on lids being provided. The batteries are also enclosed in a copper box and the whole unit finally slid into an outer case. Reference to the accompanying photographs will make the method of construction clear.

The author has refrained from describing the receiver in other than general terms, as almost any type of receiver is suitable providing that it is well screened, thoroughly stable, and sufficiently sensitive. If a superheterodyne receiver is employed, certain objectionable effects may exist, but these will be dealt with under operational notes.

The Local Signal Generator

The local signal generator employs a single oscillator valve connected in a "Hartley" circuit, employing a grid leak and condenser. The valve is of the 2-volt 0.1 amp. type, the filament being supplied by a 3-volt dry battery, and the anode by a 60-volt small capacity dry battery. Both batteries are enclosed in the internal copper screening box with the valve and radio-frequency circuits.

The output from the oscillator is taken by means of a variable magnetic coupling to a second tuned circuit, whence it is taken by means of a mutual capacity arrangement designed to reduce the harmonic content to a very small value. This is extremely important, as any appreciable harmonic content in the local oscillator will not influence the receiver, but will, nevertheless, be read by the thermo-junction which is used for measuring the output of the local signal generator, and so introduce inaccuracies into the result. Fig. 3 shows the arrangement described in detail, and it will be noted that two complete circuits are employed: one for long and one for medium waves. The coupling capacities are of such comparatively large capacity that their reactance is perhaps one-tenth of that of the tuning condenser.

Details of Measurement

A suitable thermo-junction is one giving a full-scale deflection on a sensitive galvanometer for a current of 10 mA. The galvanometer which is employed to read the gain in detector feed may be used to indicate the thermo-couple output, a jack being provided for this purpose. As previously stated, a convenient range is 0/240 microamps. for an instrument resistance of 10 ohms, and the meter should be provided with a thermal scale in addition to a linear scale.

It is necessary to obtain an accurate calibration for the junction in use, and this may be taken on DC against a standard meter, reversing the input to the junction for each value of DC and taking the mean of the output readings. If the junction is of first-class manufacture its output should be truly square-law, and a factor may be deduced by which to multiply the thermal scale galvanometer reading, thus eliminating the necessity of consulting a calibration curve for each reading.

A range of current readings of three to one cannot usually be exceeded with a thermal instrument, consequently a simple

Field-Strength Measurement—

form of current attenuator must be provided in order to cover the range of adjustment required.

Before the design of this attenuator was settled it was necessary to consider the method of introducing the comparison signal into the loop aerial, and also the magnitude of current required.

For example, the effective height of an eight-turn loop one metre square is, according to the expression previously mentioned, approximately 0.1 metre at a wavelength of 500 metres, so that for a signal strength of 5 mV. per metre the voltage introduced into the frame from the distant station will be $5 \times 0.1 = 0.5$ mV.

Injecting the Artificial Signal

It is therefore necessary, in order to ensure that the local oscillator exactly simulates the distant signal, to cause it to inject a voltage of 0.5 mV. into the loop. To bring about this result it is necessary to pass a current through the aforementioned resistance in series with the centre of the loop of such a value that the PD across the resistance is equal to 0.5 mV.

As a matter of convenience a resistance of one ohm is employed in series with the loop, and with this resistance a current of 0.5 mA. is required to produce a PD across it of 0.5 mV.

To enable such a current to be passed into the series resistance from the local oscillator, a certain current, falling within its working range, must flow in the thermo-junction circuit, and afterwards be attenuated so that a known fraction of the current, amounting to 0.5 mA., is passed through the series resistance.

The effective range of a 10-mA. thermocouple is from 3 to 10 mA. approximately, so that an attenuator giving a ratio of 8 to 1—interposed between the couple and the resistance—would be suitable in the case cited above. In these circumstances for 0.5 mA. flowing in the resistance a current of 4 mA. would be registered on the thermo-galvanometer.

To determine the maximum range of the attenuator, the minimum voltage likely to be encountered must be considered, and this will occur when measuring the minimum field-strength measurable within the limits set for the apparatus, at the longest wavelength covered by it.

It has been stated that the receiver was constructed to measure 0.5 mV. per metre at 200/500 metres, and 2 mV/m. at 1,000 to 2,000 metres. Of these two range extremes, the voltage induced in the loop will be least at 500 metres for 0.5 mV. per metre field-strength, its magnitude being determined as follows:—

Effective height of loop at 500 m., 0.1 m.
Field-strength to be measured, 0.5 mV/m.
∴ Voltage induced in loop $= 0.5 \times 0.1 = 0.05$ mV.

From this result it may be determined that the variable attenuator must have an adjustment giving a maximum ratio of the order 100 to 1.

In practice it was decided to arrange the attenuator to give steps of 1/1, 2/1, 4/1, 8/1, 16/1, 32/1 and 64/1, so that the thermo-junction, which has an effective range of 3/1, might amply "cover" the attenuator ratio steps. As a matter of convenience the attenuator was constructed in the form of a simple potentiometer having a total resistance of 500 ohms and the arrangement of the resistance elements is shown in Fig. 4.

The values of the resistance elements were as follows:—

No. 1, 250 ohms; 2, 150 ohms; 3, 44 ohms; 4, 26 ohms; 5, 15 ohms; 6, 7.5 ohms; 7, 7.5 ohms; thus giving the desired current attenuation.

Several forms of non-reactive resistance element were tested in this unit, and the most satisfactory type was finally found to consist of suitable lengths of No. 44 gauge Eureka wire, double silk covered, wound in a non-inductive manner on cylindrical ebonite formers about 0.5 in. in diameter. In order to vary the current attenuation ratio, a stud switch, having a positive stop location feature, was employed.

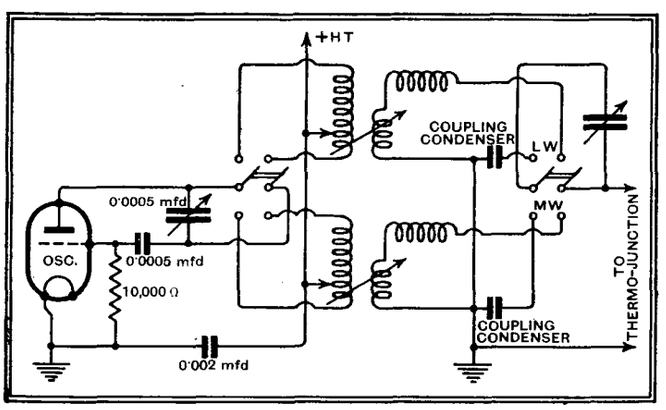

Fig. 3.—Method of coupling the oscillator.

Screening of the Oscillator Unit

It will be appreciated that the screening of the local oscillator unit is of paramount importance, as any signal from it which is introduced into the receiver through spurious coupling will seriously affect the accuracy of the result.

In order to prevent the occurrence of such leakage, the oscillator unit was doubly screened; the valve, batteries, HF coils and condensers being enclosed in an inner copper box with a screwed-on back. This inner box was mounted on the rear surface of a $\frac{3}{16}$in. aluminium panel, stood off by means of $\frac{1}{2}$in. spacing pieces. The front panel then formed the front of an aluminium box which was totally closed when the panel referred to was in its normal position.

The output from the oscillator was brought out from its case by means of a length of copper braided, rubber insulated cable, the braid forming the earth connection, and the whole being terminated on the receiver panel by means of a small "watertight" plug connection. This plug made excellent connection both for the high-potential connection and the earth, which, it will be realised, is a matter of extreme importance.

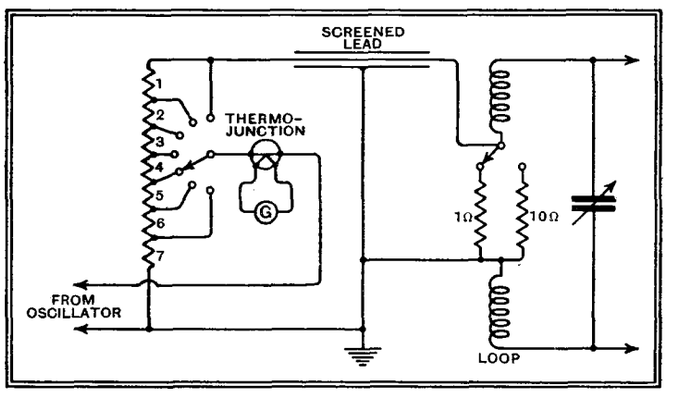

Fig. 4.—Connections of the attenuator.

Avoiding HF Leakages

All controls to the oscillator circuits were led in through earthed metal shafts, which fitted closely through the wall of the inner screening box, and were insulated from their associated components by means of ebonite bushes within the inner box. Jacks, designed to permit of reading the anode and filament voltages and currents, were arranged to be at the earthy ends of the circuits in question, and were placed so as to be as far as possible remote from points of high potential. The jack provided to enable the output of the thermo-junction to be read had, of course, to be at a certain potential above earth, but was provided with extra screening in order to preclude the possibility of unwanted external fields arising from its presence.

As a result of the precautions outlined above, the amount of HF leakage experienced was negligible, it being practically impossible to pick up the wave from the oscillator on a receiver of the highest sensitivity when the output connection was disconnected.

Two values of resistance were provided at the centre of the loop, each of which could be inserted at will by means of an instrument plug on the face of the receiver, the one having a value of one ohm and the other of ten ohms. These

Field-Strength Measurement—

resistances took the form of short lengths of fine-gauge resistance wire soldered to two terminals.

By the selection of the appropriate value of loop resistance and current attenuator stop, any value of known voltage between 0.05 mV. and 100 mV. could be injected into the loop, thus making it possible to represent signals of any intensity within the specified limits of field-strength and wave-range. Extensive tests demonstrated that the attenuator ranges and loop resistances cross-checked in an extremely satisfactory manner.

Operational Details

The method of operation has been described previously, but, for the sake of clarity, a brief recapitulation may be undertaken. Having switched on the receiver and balanced the detector feed to zero, the station is tuned in with the loop oriented for maximum signal, adjusting the gain to give a convenient value of detector feed. The loop is then rotated through 90 degrees to the minimum bearing, under which conditions the detector feed should have fallen to an extremely small value. If appreciable feed remains it is an indication that the site of the measurement is unsatisfactory, and that the incoming signal is influenced by surrounding objects such as telegraph wires, etc. In these circumstances a better site should be sought.

The local oscillator is then switched on and tuned to zero beat frequency with the trace of original signal still coming through, and the output of the oscillator increased until the detector feed is the same as it was with the loop in the position of maximum bearing on the distant station.

The detector anode current galvo is then withdrawn and plugged into the output of the thermo-junction, thus enabling the current through the latter to be read. The current, attenuator and loop resistance settings are noted, the effective height of the loop calculated, and the field-strength determined from the following formula:—

$$E(mV/m) = \frac{RKI}{h}$$

Where R is the loop centre resistance,
K is the current attenuation factor,
I is the thermal current (mA),
h is the effective height of loop (m).

If a superheterodyne receiver is employed, great care must be exercised to avoid confusion due to beating between the harmonics of the various oscillators, and it is advisable to have all dials calibrated in frequency to reduce the possibility of errors in setting.

The oscillator and receiver units may very conveniently be employed as signal generator and detector respectively for a high-frequency bridge used for laboratory experiments, the loop aerial being replaced by a suitable centre-tapped coil. In the above connection the excellent screening of both units goes far to remove the possibility of misleading results which are frequently attendant upon the existence of spurious couplings.

A further useful application of the oscillator unit lies in the field of receiver vetting, as by employing the apparatus to inject a known signal current into an artificial aerial consisting of inductance, capacity and resistance, the sensitivity of the receiver may be rapidly and accurately measured.

Modulated Signal Generator

If it is desired to modulate the output of the local signal generator this may easily be accomplished by the simple expedient of feeding into the anode current jack an LF voltage of the desired frequency. This voltage then appears in series with the anode DC voltage, and the percentage modulation is determined as follows. The value of applied voltage may be measured by means of a valve or rectifier voltmeter, and the percentage modulation is given by the following expression:—

$$V\ lf. = \frac{V\ anode\ K}{\sqrt{2} \times 100}$$

Where V lf. is sinusoidal voltage from tone-source,
V anode is DC HT voltage,
K is percentage modulation.

At higher modulation percentages a certain amount of frequency scintillation is bound to occur, but this is not considered of great consequence on the medium waveband. If the apparatus is to be used continuously for receiver testing it might be considered worth while constructing a two-stage oscillator consisting of a drive and modulated magnifier, the use of which arrangement would greatly reduce the degree of frequency scintillation.

In conclusion, the author would state that, whilst the apparatus as described has given extremely satisfactory results in service, there is no valid reason why its precise form should not be modified in order to extend the range of wavelength or sensitivity; but he would like to add that any improvement in the screening or layout of the apparatus can hardly fail to be rewarded in an added degree of accuracy and ease of manipulation.

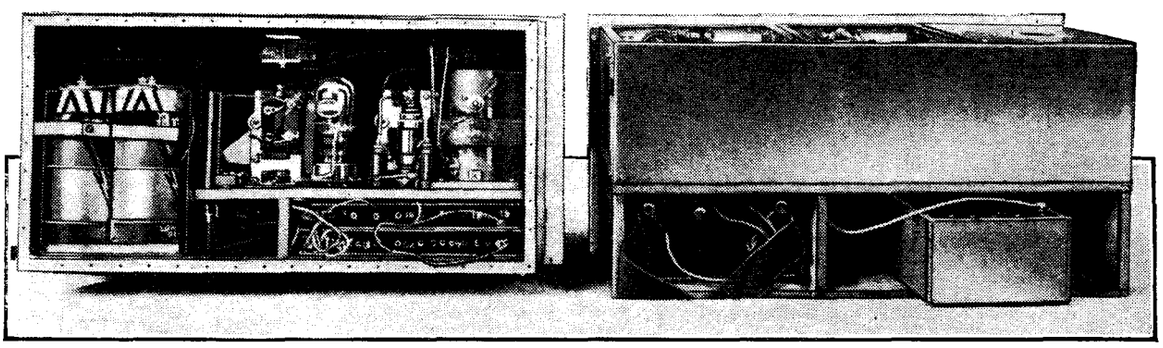

Rear view, showing disposition of batteries. etc. Oscillator on left.

ANOTHER "PROPHETIC" MONITOR

IN a previous issue a device was described whereby the passage of audio-frequency signals to a radio transmitter or sound recording system could be delayed for the purpose of automatic volume control.

Another arrangement having the same object, due to Mr. Robert Mills Morris, provides for two microphone systems in the same auditorium, one near the source of sound and the other at a distance from it of about 50 feet. The signals from the latter are controlled in volume by currents derived from the former, and the distance of 50 feet is found to be sufficient to delay the passage of the controlled signals so that the controlling circuits operate effectively.

The distant microphones must be capable of picking up the sound with sufficient distinctness, and for this purpose microphones are used of a directional focusing type. The nearby microphones are of a non-directional type, and operate automatic volume control circuits having a time delay of approximately 1/20th of a second.

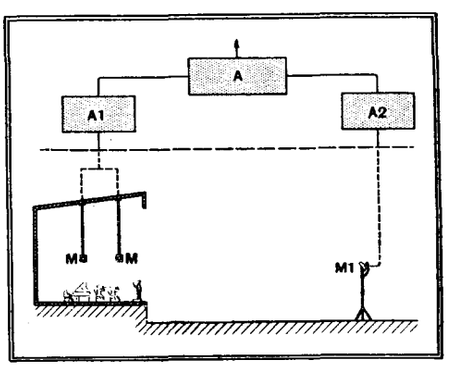

Arrangement of microphones for introducing a delayed sound effect. (British Patent Specification No. 409,967).

★ ★ ★ Listeners' Guide

Outstanding

JOHN WATT the Indefatigable, who directs more programmes than anyone else at Broadcasting House, sponsors "One Crowded Hour"—a high-speed variety programme—at 8 p.m. on Monday next. In this picture of a variety rehearsal John Watt is on the extreme left. Other well-known figures will be recognised, including Davy Burnaby and the Carlyle Cousins.

A GOOD START.

THE most churlish listener would not deny that the B.B.C. has made an energetic start in the New Year; if the execution of the multifarious plans for our enjoyment in the next three or four months is as good as the intentions which have animated them, this should be one of the brightest New Years in the memory of listeners.

Critics may censure the revival of old features such as "Conversations in the Train" and "First Time Here," but I doubt whether these resuscitations really betoken lack of originality on the part of the B.B.C. Both features were successes and were allowed to lapse for a time only in order that we might appreciate them still more at a later date.

A MUSICAL WEEK.

MUSICALLY speaking, this is an important week. To-night (Friday) is Beethoven night at the Queen's Hall, with Arthur Catterall as the soloist in the Violin Concerto in D. Also there is the great C Minor Symphony, No. 5.

On Wednesday next comes the musical high-light of the week—the Handel-Bach anniversary concert, in which the two Masters share the honours, the former with such favourites as the Occasional Oratorio Overture and the Organ Concerto No. 10 in D Minor (played by the famous French executant, Marcel Dupre), and the latter with the Violin Concerto No. 2 in E, with Isolde Menges as soloist, and Jo Vincent and Frank Titterton in Arias from the Cantatas.

Other musical peaks are the appearance of the London Symphony Orchestra in the Regional programme on Sunday evening (9.20) under the direction of Sir Landon Ronald, a joint recital on Wednesday (Regional, 9.30) by Esther Coleman (contralto) and Ernest Lush (pianoforte), and British night at the "Proms." on Thursday (Regional, 8).

ORCHESTRAL CONCERTS

THE Continental stations must have observed the voting of *The Wireless World* readers as recorded in a recent paragraph, for the coming week is crammed with good orchestral concerts.

To-morrow the French National Orchestra will be heard from Paris PTT at 8.30. On Tuesday the Brussels Symphony Orchestra gives a Tchaikovsky concert at eight o'clock.

Hamburg's station orchestra gives a concert at 10 p.m. on Wednesday, while two first-class orchestral broadcasts are available on Thursday: the first a Mendelssohn concert by the Symphony Orchestra at Brussels No. 1 (8 p.m.) with extracts from "A Midsummer Night's Dream," and the second the thirteenth Thursday concert from the State Broadcasting Building at Copenhagen by the Radio Symphony Orchestra and the Station Radio Choir conducted by Fritz Busch.

AN OFFENBACH NIGHT.

FEW nineteenth-century composers of the lighter type of music have had a greater vogue in this twentieth century than Offenbach, famous for his "Tales of Hoffman." Lovers of Offenbach's striking musical idioms will make a note to tune in the National transmitter at 8 on Tuesday next when a special programme, "The Life of Offenbach," will be presented in the form of a potpourri of his works. The arrangement has been prepared by Dr. Artur Kulka and Dr. Julius Bürger. Producer: Stanford Robinson.

"STUDIO AUDIENCE" OF 20,000

WHETHER or not one understands German it should be worth while tuning in for a few minutes to the "Day of the Saar" mass meeting in the Berlin Sports Palace between 7 and 9 p.m. on Sunday next. The Palace accommodates 20,000 persons.

The programme is being transmitted by all German stations.

YOUNG PEOPLE'S VIEWS.

"YOUTH LOOKS AHEAD" is the title of one of the new talks features which begins on Monday evening (National, 9). This series of twenty-minute talks will be contributed by a number of young men, and perhaps women, in their late twenties. The idea is to give young people an opportunity of expounding their philosophy of life.

The speakers have been chosen for their varied interests in different spheres of life, and though they will not be labelled and can say what they like, their talks will, presumably, tend to deal with the subjects they have made their own. Speakers will include Mr. J. F. Wolfenden, headmaster of Uppingham School, the Rev. Joseph McCulloch, and Mr. John Boyd-Carpenter

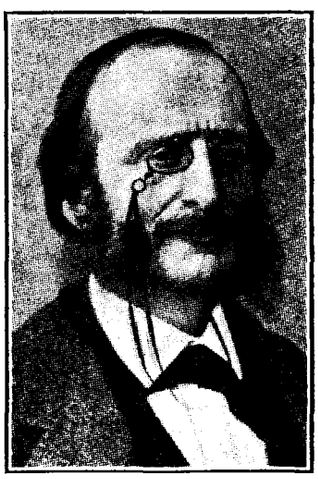

[Photo: Rischgitz

"THE LIFE OF OFFENBACH"—a potpourri to be broadcast on Monday (Reg. 9) and Tuesday (Nat. 8)—will be studded with operatic gems of the master, whose portrait appears above.

for the Week

Broadcasts at Home and Abroad

TRAVELLING TO MUSIC

MUSICAL travelogues are, for some reason, more popular in Germany than over here. Their great advantage, to the foreign listener, is that a barest knowledge of the language is necessary in order to follow the progress of the commentator, who is usually aided by copious musical extracts and "effects" noises. To-morrow night (7.10 p.m.) Hamburg takes listeners "Round the Mediterranean" with the help of the station choir, mandolin and guitar players, the symphony orchestra and dance band. This sounds an appetising combination.

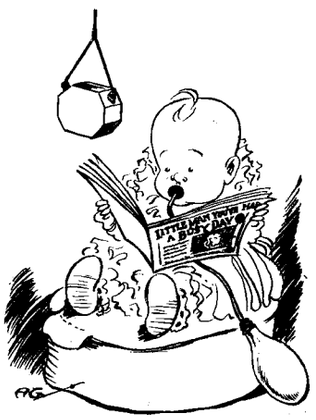

"FIRST TIME HERE" will be revived in to-night's variety programme at 7.50 (Regional).

HENRY HALL IN BERLIN DANCE RELAY

HENRY HALL and the B.B.C. Dance Orchestra contribute to an international relay of dance music which Berlin is transmitting from 7.10 to 11 p.m. on Thursday next, January 10th. The dance music is taken from Budapest (7.10 to 8); Stockholm (8 to 9); Buenos Aires (9.25 to 10); and London (10 to 11).

THIS MODERN ART.

MR. ERIC NEWTON (of the *Manchester Guardian*) is a brave man, for in a series of talks starting on Monday at 7.30 entitled, "The Artist and His Public," he is to attempt to explain the significance of modern art and the reasons for the great disagreement between modernist and traditionalist.

Will he really bring about any conversions? If he fails it will not be through lack of collaborators, for Mr. Newton is inviting to the studio to debate with him such authorities as Sir Reginald Blomfield, Sir Charles Holmes, Mr. R. H. Wilenski, Mr. Edward Wadsworth, and Mr. D. S. MacColl.

GERMANY'S POPULAR MELODIES

GERMANY'S new light music is to be a feature of the Deutschlandsender programme at 7 p.m. on Monday next in a programme called "Popular Melody." This transmission should be interesting to listeners who wish to judge the new type of music in Germany since the ban on Jewish composers. One of the contributors to this first programme is Dr. Willy Richartz, one of the few officials of the Radio Rundfunk organisation who are permitted to have their works broadcast.

OPERAS AND OPERETTAS

OPERA lovers are not forgotten this week. To-night Paris PTT (8.30 p.m.) is broadcasting Mozart's one-act opera "Der Schauspieldirektor" followed by Dupont's opera in two acts—"La Farce du Cuvier." Earlier in the evening Königsberg (7.10) is giving a concert version of Mozart's "Figaro."

Maria Tomanova, Prague announcer, photographed in national dress.

Two attractive operetta programmes are "La Mascotte" by Audran from Rome at 7.45 p.m. on Sunday, and a concert of Lehar operetta music from Kalundborg at 8.15 on Monday.

VENTRILOQUISM

THE biggest figure in to-morrow night's "Music Hall" (National, 8.30) will be Teddy Brown, who will set up his beloved xylophone on the stage. Other artists include Walsh and Baker, duettists, Lily Morris, the comedienne, and Johnson Clark, the sportsman ventriloquist.

Johnson Clark is such a good ventriloquist that many listeners tuned to the Regional wavelength may hear him in the background on the National wavelength.

THE AUDITOR.

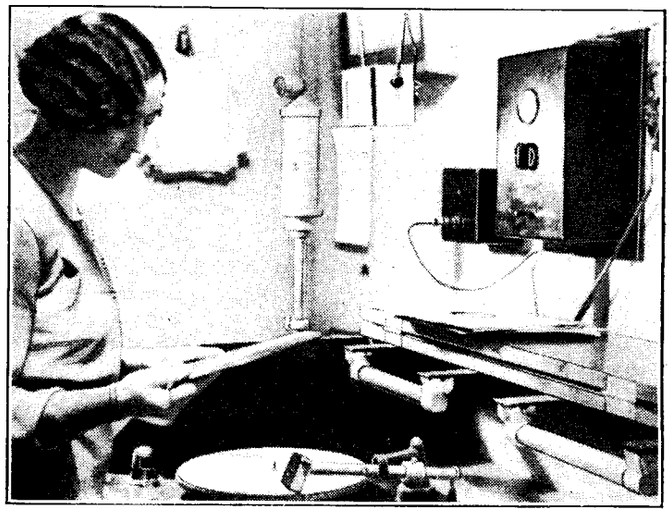

The late night gramophone concerts from Stuttgart-Frankfurt are well worth listening to. They are introduced by Fraulein Annie Herrmann, who is here seen translating a difficult German title into French and Italian.

HIGHLIGHTS OF THE WEEK

FRIDAY, JAN. 4th.

Nat., 7.30, Student Songs. 8, Beethoven Promenade Concert.
London Reg., 7.50, "First Time Here."

Abroad.
Königsberg, 7.10, Opera, "Figaro" (Mozart).

SATURDAY, JAN. 5th.

Nat., 7, "In Town To-Night." 8.10, "Conversations in the Train." 8.30, "Music Hall."
London Reg., 7.30, "New Discs for Old," by John Watt. 8, Promenade Concert. 11, Henry Hall's Guest Night.

Abrood.
Paris P.T.T., 8.30, Symphony Concert by the National Orchestra.

SUNDAY JAN. 6th.

Nat., 5.30, The Spencer Dyke String Quartet. 9.0, Albert Sandler and the Park Lane Hotel Orchestra.
London Reg., 9.20, The London Symphony Orchestra conducted by Sir Landon Ronald.

Abroad.
Vienna, 9.50, Military music by the celebrated Deutschmeister band.

MONDAY, JAN. 7th.

Nat., 7.30, "Youth Looks Ahead"—I, by Eric Newton. 8.0, "One Crowded Hour"— high - speed variety directed by John Watt. 10, Chamber Music by the English Ensemble.
London Reg., 6.30, Eugene Pini and His Tango Orchestra. 8.15 (from Midland Regional), "The Black Dog of Hergest"—a dramatised Herefordshire Folk Tale, produced by Martin Webster. 9, "The Life of Offenbach"—a potpourri of the composer's works.

Abroad.
Deutschlandsender, Stuttgart, Cologne, 11, Late night concert by the National Socialist Symphony Orchestra.

TUESDAY, JAN. 8th.

Nat., 8, "The Life of Offenbach." 9, Play "A Farewell Supper," by Schnitzler, in a Viennese setting.
London Reg., 8, Russian Promenade Concert.

Abroad.
Prague, 6.30—9, "Dobora"—a musical play by Foerster.

WEDNESDAY, JAN. 9th.

Nat., 8, Bach-Handel Anniversary—a special Promenade Concert.
London Reg., 7, The B.B.C. Theatre Orchestra. 8, "In the Shadow," a play by Horton Giddy, produced by Peter Creswell. 8.40, Concert by Café Colette Orchestra.

Abroad.
Deutschlandsender, 10, "Far from the Ball"—a dance programme for dreamers.

THURSDAY, JAN. 10th.

Nat., 8, The Wireless Military Band. 8.40, Play "In the Shadow."
London Reg., 8, Promenade Concert—British night.

Abroad.
Brussels No. 1, 8, Mendelssohn Concert by the Symphony Orchestra.

HINTS and TIPS

Practical Aids to Better Reception

Condenser Stops

THE provision of adjustable stops for limiting the rotation of a tuning condenser provides an easy solution of several little problems that at first sight may appear to be difficult. As an example, one may cite the design of a two-station receiver intended to be remotely controlled through a Bowden wire or similar mechanism from a distant point. It is a comparatively simple matter to set a pair of stops so that the capacity of the condenser at either extremity of its arc of rotation corresponds to the desired tuning positions. This plan obviates the need for a highly accurate mechanical control, free from "lost motion."

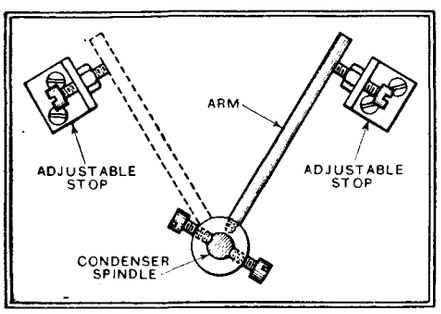

Fig. 1.—Pre-set tuning : method of locating alternative condenser adjustments.

The same principle has applications when one is attempting to improvise a method of providing a simple two-position selectivity control. Any tendency towards change of tuning in the IF couplings might quite easily be counteracted with sufficient accuracy by fitting mechanically linked controls for the trimming condensers, thus obviating the need for individual readjustment. Further, adjustments of capacity coupling between several circuits, or even adjustments of inductive coupling, could be arranged in a similar way.

Re-trimming

THE fact that a whole series of articles, running through many issues of *The Wireless World,* was devoted exclusively to problems associated with the alignment of mechanically linked tuned circuits—more simply, ganged tuning—is proof that the subject is by no means free from complexity. It therefore follows that the amateur, before attempting a complete realignment of the circuits of his receiver, should make sure that he understands the appropriate course of procedure.

Re-trimming of *all* the circuits is, in a superheterodyne or other set of the more ambitious type, a major operation, not to be undertaken lightly, but there is little reason why the readjustment of a single trimmer should not be tackled with confidence even by the inexperienced. For instance, one need not hesitate to try the effect of readjusting the aerial-circuit trimmer, and it is a fact that the operation of most sets can be improved by doing so.

A Visual Alarm

MOST of the warning devices employing semi-radio technique give an audible alarm; for instance, parents who have installed that favourite device of our wireless humorists, the "baby alarm," fondly expect that the cries of their fractious progeny, picked up by a microphone and superimposed on the broadcast programmes, will warn them that attention is needed.

There are, however, occasions when a visual indication is preferable to an audible one, and it is thought that at least some readers will be interested in a short description of a simple device whereby the incidence of a sound impulse may cause a warning lamp to light.

The apparatus, of which the connections are given in Fig. 2, was originally planned for a special purpose and has proved to be dependable in action.

The sound impulses which actuate the alarm are picked up by a permanent-magnet moving-coil loud speaker, which for this particular purpose was considered to be more trustworthy than a microphone of about the same cost. After amplification, impulses originating in this improvised microphone are applied to the grid of the output valve, which is negatively biased so heavily that its anode current is reduced virtually to zero under quiescent conditions. As a consequence, there is a negligible drop of voltage across the 20,000-ohm anode resistance until sounds are picked up. A neon lamp (Philips 150-volt type) in series with a battery is shunted across this resistance and the voltage of the battery is adjusted so that the lamp just fails to glow so long as the microphone is quiescent. But on the application of a sound impulse of sufficient intensity, the output valve grid becomes less negative and anode current flows through the resistance, giving rise to a voltage drop which is additive to the voltage of the battery; the lamp therefore lights and, thanks to the "backlash" effect, remains alight until the circuit is interrupted by means of the switch S. Alternatively, it is possible to adjust the battery voltage so that the warning lamp flickers in and out in sympathy with sounds impinging on the microphone.

The circuit arrangement shown is that actually used, but it is obviously susceptible to modification for special requirements.

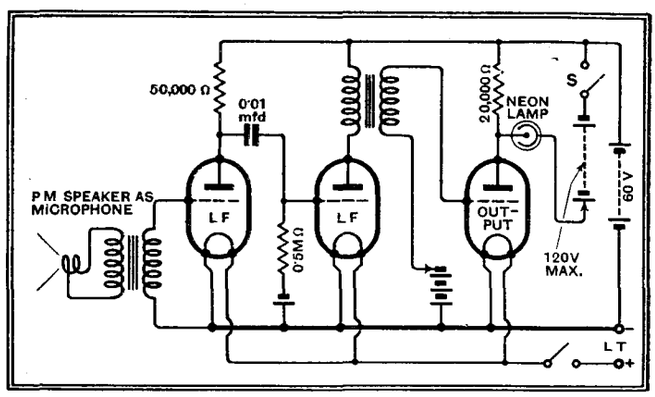

Fig. 2.—Application of a sound impulse to the microphone causes the warning lamp to light.

A Thought for the Neighbours

A SUGGESTION was recently made in the Hints and Tips section that those who suffer from electrical interference, even in its milder form, would be well advised to try the comparatively inexpensive expedient of fitting a condenser filter at the point where the supply mains enter the building. It might have been added that those who adopt this suggestion will have the satisfaction of knowing that the fitting of by-pass condensers in the manner suggested often proves effective in preventing the dissemination of interference from the user's own electrical system to other listeners.

It is not for a moment claimed that this type of interference suppressor, connected in the manner under discussion, is an entirely effective substitute for individual suppressors connected directly to the apparatus causing the trouble; it may be expected, however, to reduce electrical radiation from such appliances as light switches, etc., to which individual suppressors can hardly be fitted.

"Radio Communication"

A Museum in Paper Covers

EVERY wireless enthusiast should pay a visit to the radio section of the Science Museum, South Kensington. "Radio Communication" —the book under review—tells the history of wireless as portrayed by the Museum Exhibits

AS a race we are not lovers of museums. The very word has a musty flavour and is often used in a derogatory sense, particularly when applied to certain radio shops and exhibitions. Yet the Radio Section of the Science Museum, South Kensington, if it lacks the glamour of Radiolympia, has a real claim to the attention of all listeners whose interest in wireless extends beyond the programmes of the B.B.C.

This is not to say that the museum fails to cater for the general listener. Scores of ordinary folk can be found on wet Saturday afternoons in the Radio Section, absorbed in the superb quality obtainable on the great exponential horn which dominates the radio rooms, and oblivious to their strange environment of coherers, Leyden jars and Hertz oscillators.

It is to be feared, however, that really knowledgeable visitors to the Radio Section of the Science Museum are fewer than they might be. But if Mahomet won't go to the mountain, the mountain has very handsomely come to Mahomet in the shape of the 96-page book[1] under review, which tells a lavishly illustrated story of the history and development of radio communication as portrayed by the exhibits at South Kensington. Except that a visit to the Museum gives a three-dimensional view of the actual exhibits, one might question whether a study of the book and pictures is not enough in itself. The author, Mr. W. T. O'Dea, B.Sc., A.M.I.E.E., chief of the Radio Section, has covered all the ground between 1780, when Adams discovered minute sparks between charged and uncharged conductors, and 1934, with cathode ray television and micro-wave communication interest to the historical passages and almost compels one to make the trip to South Kensington to see these things for oneself.

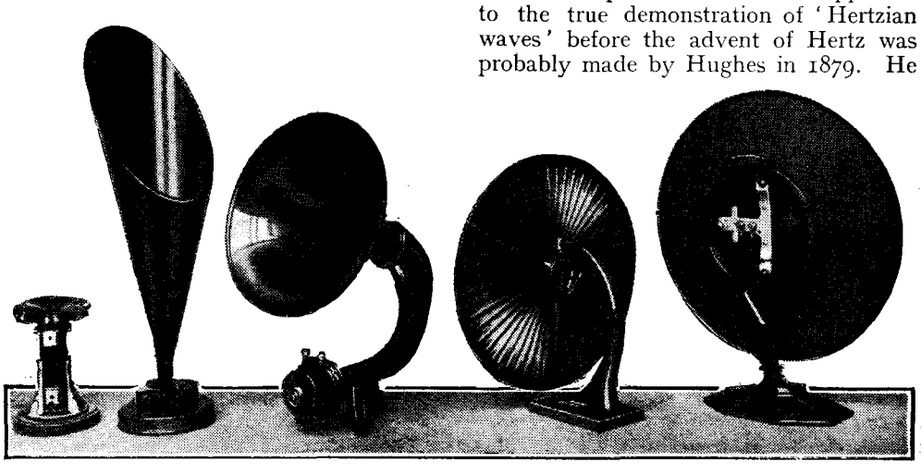

LOUD SPEAKER HISTORY AT A GLANCE. An interesting array in the Radio Section showing (left to right) S.G. Brown Loud-speaking telephone, 1912 ; S. G. Brown Conical Horn, 1921 ; Amplion Horn, 1922-3 ; Sterling Primax Lumière Diaphragm, 1924 ; Western Electric Kone, 1925.

For example: "The nearest approach to the true demonstration of 'Hertzian waves' before the advent of Hertz was probably made by Hughes in 1879. He was experimenting with his microphones* and also with the induction balance*. While using the latter he was unable to get a perfect balance and, after suspecting the insulation of his coils, he finally found a loose contact was the cause of the trouble. The loose contact naturally appealed to Hughes as a microphonic joint, as the microphone was being developed by him at the time. He therefore connected a microphone and telephone in circuit and discovered that, without any direct connection, a sound was heard in the telephone whenever an intermittent current passed through the coils, even at a distance of several feet. The microphone he used was a steel needle in loose contact with a piece of coke,* which provided a self-restoring coherer of the type later rediscovered by Lodge and Branly."

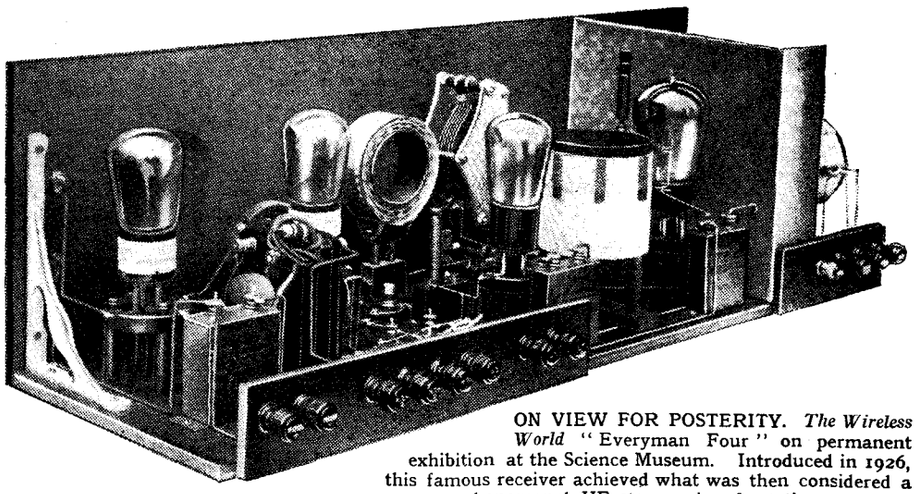

ON VIEW FOR POSTERITY. *The Wireless World* "Everyman Four" on permanent exhibition at the Science Museum. Introduced in 1926, this famous receiver achieved what was then considered a phenomenal HF stage gain of 45 times.

Unobservant people like the present writer will be pleasantly intrigued by the mysterious asterisks which are dotted over these pages. Actually, as the reader may later discover, each asterisk indicates that the object so marked can be found in the Museum. This gives added

Detecting the Waves

Again, "Hertz placed parabolic metal reflectors,* pitch prisms,* and grids made of wire* in their correct positions with regard to the oscillator and resonator to demonstrate the reflection, refraction, and polarisation of the electromagnetic waves."

When Sherlock Holmes was beginning to startle the world with his detective skill, just as thrilling detective work was afoot in the track of these elusive electro-magnetic waves.

"The deliberate application of the coherer principle to the detection of wireless signals was largely due to Lodge who, in 1889, arranged two metal spheres in

[1] Science Museum, South Kensington: Handbook of the Collections Illustrating Electrical Engineering; II. Radio Communication. Part I.—History and Development. By W. T. O'Dea, B.Sc., A.M.I.E.E. (London. H.M. Stationery Office. Pp. 96. Price 2s. 6d. net.)

Radio Communication—

such close proximity that they were separated only by the minutest film of air*. The passage of a spark made the spheres cohere, but a slight mechanical shock would restore them to their original highly resistive condition. Branly, in 1890 . . . produced a sensitive brass filings coherer which could also be restored to its original condition by a mechanical shock."

Rutherford, in 1895, succeeded in detecting Hertzian oscillations at a distance of three-quarters of a mile, using a magnetised steel needle in the centre of a bobbin of fine wire. In 1897 we find Professor Ernest Wilson constructing a similar detector (now in the Museum), and this was the forerunner of Marconi's famous magnetic detector of 1902. The Museum, in fact, abounds in detectors of all kinds, including one of the earliest practical electrolytic types, the De Forest "Responder," which was used during the Russo-Japanese war.

Of the inventing of crystal detectors there was no end, and the Museum shows that the same applies to thermionic valves. Indeed, the Museum would be worth a special visit if only for the sake of the serried ranks of valves, from the original Fleming detector of 1904 to the multi-electrode types of the present day.

Radio history becomes dynamic with the advent of Guglielmo Marconi. He was a pupil of Professor Righi, of Bologna, when, in 1895, he conceived the idea of developing a signal system which would employ the Hertzian waves. He began by constructing an improved type of Branly coherer and placing his radiator and resonator at the focus of parabolic metal reflectors. These reflectors are in the Museum to-day. The results he obtained were so encouraging that he was advised to see Sir William Preece, of the British Post Office, while on a visit to Ireland in the following year. He was then only twenty-two years old. Thereafter Marconi's story is of one triumph after another. Much of that story is told in the glass cases of South Kensington.

There is the famous "jigger" or oscillation transformer, the spark gap of 1898 and the first tuned transmitter, constructed in 1899.

The "Everyman Four"

Some of these exhibits may seem too remote in time to arouse the interest of listeners to-day. But when we come to the broadcasting era there is much to attract and amuse. The broadcast receivers of ten and twelve years ago, with panels like power station switchboards and external coils resembling nothing that had hitherto existed on earth, look just as quaint as the early telegraphy apparatus. But as each year rolls by improvement becomes more and more marked; and not the least surprising feature is that the more complicated the technique the simpler is the apparent design.

A *Wireless World* "Everyman Four" is on permanent exhibition as marking an epoch in broadcast reception. This receiver, introduced in 1926, "achieved what was considered a phenomenal stage gain of 45 times the input strength."

Loud speakers are in a class by themselves. All the representative types figure in the Science Museum, from S. G. Brown's "loud speaking telephone" of 1912 to moving coil models of to-day.

A museum is concerned with the past, but no one who cons this stimulating volume, or, better still, pays a visit to the Science Museum itself, will resist the urge to pry into the possibilities of the future. It seems difficult to imagine how progress can continue at the same breakneck pace as in the past fifty years. That it will, we need not doubt. It would be interesting to accompany our grandchildren on their visits to the Science Museum in 1985.

E. C. T.

DISTANT RECEPTION NOTES

ATMOSPHERICS are mysterious things. In the ordinary way they are to be expected when the weather is unsettled, when temperatures are abnormal for the time of year, and of course when there is thunder about. The conditions which make for freedom from atmospheric interference are a steady barometer with a moderately high reading, normal temperatures, and generally settled conditions. But you never can tell.

In the middle of December we had a period when deep depressions over the Atlantic were hard upon the heels of still deeper depressions over Iceland. There was pelting rain; there was even some thunder. The temperatures were much more like those of a normal October.

Yet on no evening were atmospherics in evidence.

A good many new high-powered stations are either testing, mainly out of programme hours, or due to begin tests. One of these is Rennes on 288.5 metres, which is to be heard at great strength on certain evenings, usually at rather a late hour. It is stated officially that the power at present used is 40 kilowatts, though under the Ferrié scheme the transmitter is to have an output rating of 120 kilowatts. There are rumours that the French authorities intend to use 40 kilowatts from Rennes as a temporary measure and that the station is being replanned for an eventual output of 150 kilowatts, though I have seen the figure put as high as 200. It seems hardly likely that the French Ministry of Posts and Telegraphs, which controls—nominally at any rate—broadcasting in that country, will authorise the use of more than 120 kilowatts, for were they to do so they would be driving the proverbial horse and cart through the Lucerne Agreement.

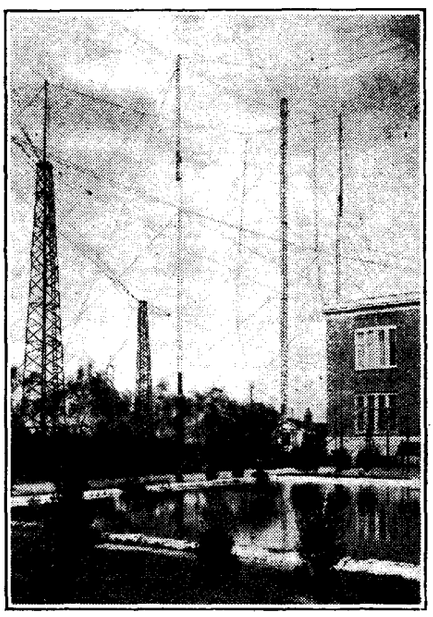

BERLIN'S INTERNATIONAL DANCE RELAY on Thursday next will include a Buenos Aires item transmitted by this Telefunken station (16.57 metres, 18,115 kc/s) at Monte Grande between 9.25 and 10 p.m.

Actually under this agreement the output rating of stations with wavelengths between 272.7 and 545 metres is limited to 100 kilowatts; but Budapest, Prague and Leipzig are all using 120. So far no country whose representatives signed the agreement has announced its intention of going beyond the 120-kilowatt mark. It is rather to be hoped that this will remain as the limit for stations using the wavelengths mentioned, for it is probably as much as could be employed on the already overcrowded medium waveband without causing interference.

Now the "Droitwich Effect"

What was originally known as the Luxembourg Effect is now known by a good many listeners as the Droitwich Effect. Its manifestations are exceedingly interesting to the experimenter, though no doubt somewhat trying to the listener. As I mentioned some time ago, Dr. van de Pol predicted that Droitwich would appear in Holland as a background to Athlone; and this it duly did. Until recently it has been taken more or less for granted that the longer-wave station can "ghost" the transmissions of that using the shorter wave, but not vice versa. But many reports have reached me that in the case of Droitwich the *vice*, if I may so put it, is very much *versâ*. There are instances of various regional stations "butting" in on the long waves—there is no question of break-through—and mingling themselves with Droitwich.

Meanwhile the original long-wave-on-top-of-short-wave effect is causing a good deal of trouble in the West Country. A glance at the map shows that Droitwich and the West Regional are very nearly in a straight line with large parts of Devon and Cornwall, and in many localities in these counties the West Regional is often not receivable.

There is some improvement at present on the long waves, Huizen, Radio-Paris, Zeseen, Kalundborg and Oslo coming in more often than not clear of interference. Motala, Warsaw and Luxembourg, however, are seldom free, and both Kalundborg and Oslo are heterodyned at times.

There is so much choice on the medium waves on most evenings that it is not easy to pick a dozen best stations. Here, though, are twelve which at the present time are perfectly reliable: Stuttgart, Vienna, Lyons Doua, Cologne, Stockholm, Rome, Munich, Leipzig, Berlin, Hamburg, the Poste Parisien, and Bordeaux Lafayette.

D. EXER.

CURRENT TOPICS

Events of the Week in Brief

Higher Power for German World Station

THE Zeesen short-wave transmitters, at present working on 8 kilowatts, are to be replaced by new installations operating on 20 kilowatts.

Set Servicing in U.S.

THERE are 4,501 radio repair shops in the United States and, according to a report of the U.S. Census Bureau, they did a gross business of $6,145,000 in servicing radio sets during 1933.

Cinema-Radio Plan for Schools

THE French Government is considering a proposal of the Education League to inaugurate a three-years' radio-cinema plan to endow schools with 100,000 radio receivers and 30,000 cinema projectors.

The estimated cost is about 7 million pounds, a third of which would be provided by the State.

Radio and Duels

WHEN, quite recently, a certain French political leader and an ex-soldier were involved in a dispute, a duel was arranged. Although the duel did not materialise, the duelling ground on the date arranged was besieged by newspaper reporters, cinema photographers, and even a radio reporter with microphone and recording van.

It is stated that in future all "combats of honour" will be reported for the delectation of wireless listeners.

The Aerial Wavelength

ALL radio stations of the Airways Network of the U.S. Department of Commerce are now required to maintain a watch on the wavelength of 96.5 metres, as it is understood that all two-way "plane-to-ground" communications will be conducted on this wavelength.

The reservation of the 96.5-metre wavelength should ensure the same safety for aerial navigation as the 600-metre wave has for maritime navigation.

Short Waves from Hungary

THE new Hungarian short-wave station is transmitting twice weekly, *i.e.*, on Sundays from 2 to 3 p.m. (wavelength: 19.51 metres; call sign: HAS), and Mondays from 2 to 3 a.m. (wavelength: 55.56 metres; call sign: HAT). Times are G.M.T.

Reports will be welcomed from British listeners, and should be addressed to: Postakiserleti Allomas, Budapest, IX Gyali ut 22.

Unbelievers

ACCORDING to a correspondent, the Danish broadcasting authorities "do not believe in television." For this reason the new Broadcasting House in Copenhagen will not be equipped with television studios or special aerials.

More Free Licences

ONE way of replying to complaints regarding the high cost of wireless licences is to draw attention to the number of free licences issued to the unemployed and deserving poor. Our Berlin correspondent reports that the German Post Office has announced that from April 1st onwards some 180,000 more persons will come under the free licensing scheme. At present approximately 400,000 people are receiving free licences.

It is believed that this move on the part of the Ministers of Finance, Propaganda and Posts has arisen out of the increasing number of letters demanding the reduction of the present licence fee of 2 Reichmarks a month.

French Colonial Broadcasts

THE French short-wave Colonial broadcasts from Paris are to be increased in importance by improving the programme material. As a first step weekly talks are to be given on Wednesdays at 6 p.m. by famous personages, particularly those qualified to appeal to listeners overseas. The forthcoming programme includes a select list of Deputies and ex-Cabinet Ministers.

Why Men Win

PSYCHOLOGISTS at Harvard University have discovered certain reasons why feminine announcers are less popular than male. They have discovered that women are inclined to "put on airs" when they realise that a good-sized audience is taking in their verbal offerings. Further, the professors find that people are quicker to note affectation in the voices of their own sex than in the other sex. Obviously, then, women listeners are quick to notice this defect in feminine announcers.

It is considered also that male announcers are better liked because their voices are pitched lower, and are therefore "more persuasive."

The committee has, however, something to say for the feminine voice in connection with the broadcasting of poetry. Apparently, there is inherent romance behind the feminine voice. On the other hand, male speakers are preferred for programmes which include weather and news reports and advertisements.

Ostiaks and Volgouls

GOOD times are ahead for the Ostiaks and the Volgouls, according to a report from the portion of Siberia in which these amiable folk live. It is stated that the Soviet broadcasting authorities are arranging for the installation of radio centres for the benefit of these people, who are cut off from the civilisation of Moscow.

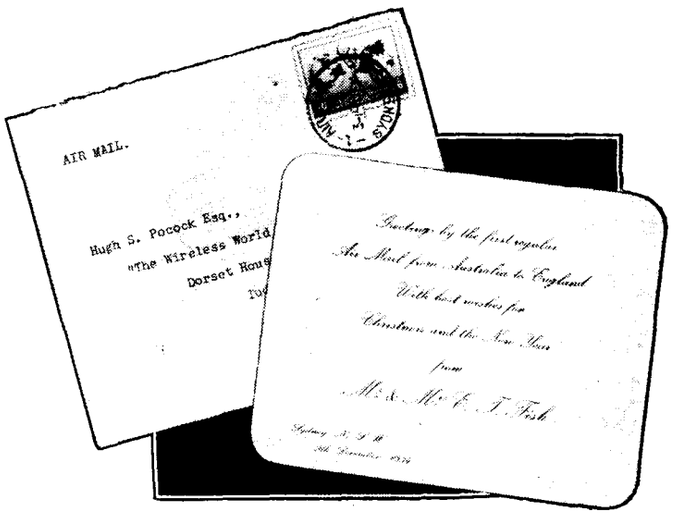

AIR MAIL FROM AUSTRALIA. The first delivery of air mail direct from Australia included this card of greeting from Mr. and Mrs. E. T. Fisk, of Sydney. Mr. Fisk, as managing director of Amalgamated Wireless (Australasia), Ltd., has been closely associated with Australian commercial radio and broadcast development.

The Melodious Voice

A COMPETITION to find the most melodious voice in Paris takes place on Monday next, January 7th, when competitors of both sexes will be invited to appear before a jury consisting of orators, authors and artists. Competitors will each read a ten-line verse and make spontaneous replies to questions put to them by the jury. The prize-winning voices will be recorded on discs, and those "placed" will be permitted to speak at least once before the microphone of a Parisian broadcasting station.

Seizing the Set

INDIGNATION has been aroused in Brisbane by the high-handed methods of their Post Office authorities in seizing wireless receiving sets of persons not in possession of a licence. According to a correspondent of *The Manchester Guardian*, the right to walk into a listener's home and confiscate his set is claimed under a section of the Wireless Telegraphy Act of 1905, which was passed to stop private transmissions competing with Governmental telegraphy.

The Australian Post Office contends that these confiscations "bring more results in licence issues in five days than were to be got out of prosecutions in eight years."

England in Egypt

EGYPTIAN broadcasting has gone "all British" in the matter of its new studio at Cairo, the architectural design of which follows the Tudor style. The studio is approached through a small sound-proof lobby illuminated by an old English lantern. The specially treated walls of the studio are panelled and at one end is an old English fireplace on which stand three electric candles showing red, green, or white, as desired, for signalling from the control room.

Tests show that the studio has good acoustic qualities and is capable of doing justice to an orchestra of twenty-six musicians.

Engineers on duty in the control room can view the studio through a sound-proof glass window, while the announcer's corner can be seen by means of a mirror concealed in the dummy chimney of the fireplace.

Egyptian transmissions are now carried out on wavelengths of 222.6 metres (Cairo) and 209.9 metres (Alexandria).

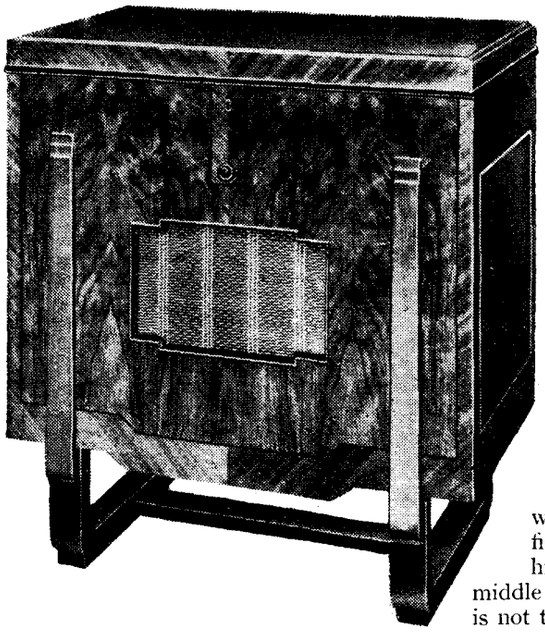

Marconiphone Radio-

Well-balanced Tonal Quality in an Instrument of Outstanding Technical Interest

FEATURES.—*Type.*—*Superheterodyne radio-gramophone with automatic record changer for AC mains.* ***Circuit.*—***HF amplifier—heptode frequency changer—var-mu first IF stage — SG second IF stage — double-diode-triode second detector—double-diode-triode QAVC valve—push-pull triode output stage. Full-wave valve rectifier.* ***Controls.*—***(1) Tuning, with "barometer" tuning indicator. (2) Waverange and static suppressor control. (3) Tone control and "Selective"—"High-Fidelity" switch. (4) Volume control and record rejector button. (5) Mains on-off switch. (6) Record changer controls.* ***Price.*—***48 guineas.* ***Makers.*—***Marconiphone Co., Ltd., 210-212, Tottenham Court Road, London, W.1.*

THE quality of reproduction of this instrument, in our opinion, is the first of its many claims to the serious consideration of those in search of a really high-grade radio-gramophone. The new elliptical diaphragm loud speaker has fully justified the claims of the designers, and gives a range of response which is calculated to provide quality of the highest possible entertainment value and naturalness. There is none of the over-accentuation of background hiss, which is frequently associated with "high-fidelity." Yet few will find fault with the crispness of the high-note response. The important middle register is round and full, and there is not the least suggestion of resonance in the bass response, which extends well down below the usual lower limit of 90 or 100 cycles. From every point of view quality that can be listened to with real enjoyment.

The new type of woven metal loud speaker grille is worthy of note. It is completely vibrationless yet does not appear to impede the sound output in any way. This is only one of the many original features of the set, and the design of the control knobs is further evidence that the designers had no intention of being tied down to conventional practice. The pointer of the unusually long horizontal tuning scale is actuated by a large diameter knob fitted with a miniature handle for rapid searching of the waverange. A "barometer" type light column tuning indicator is situated at the top of the scale. Both the volume control and waverange knobs are capable of vertical as well as rotary action, the subsidiary control on the waverange knob bringing into action the adjustable static suppressor and that on the volume control changing the circuit conditions from Selective to "High-Fidelity" reception.

Primarily, the function of this control is to change the overall band width of the receiver response from 7 kc/s to 14 kc/s, but this in itself is not regarded as sufficient to give the standard of high quality desired. In effect, when the control is

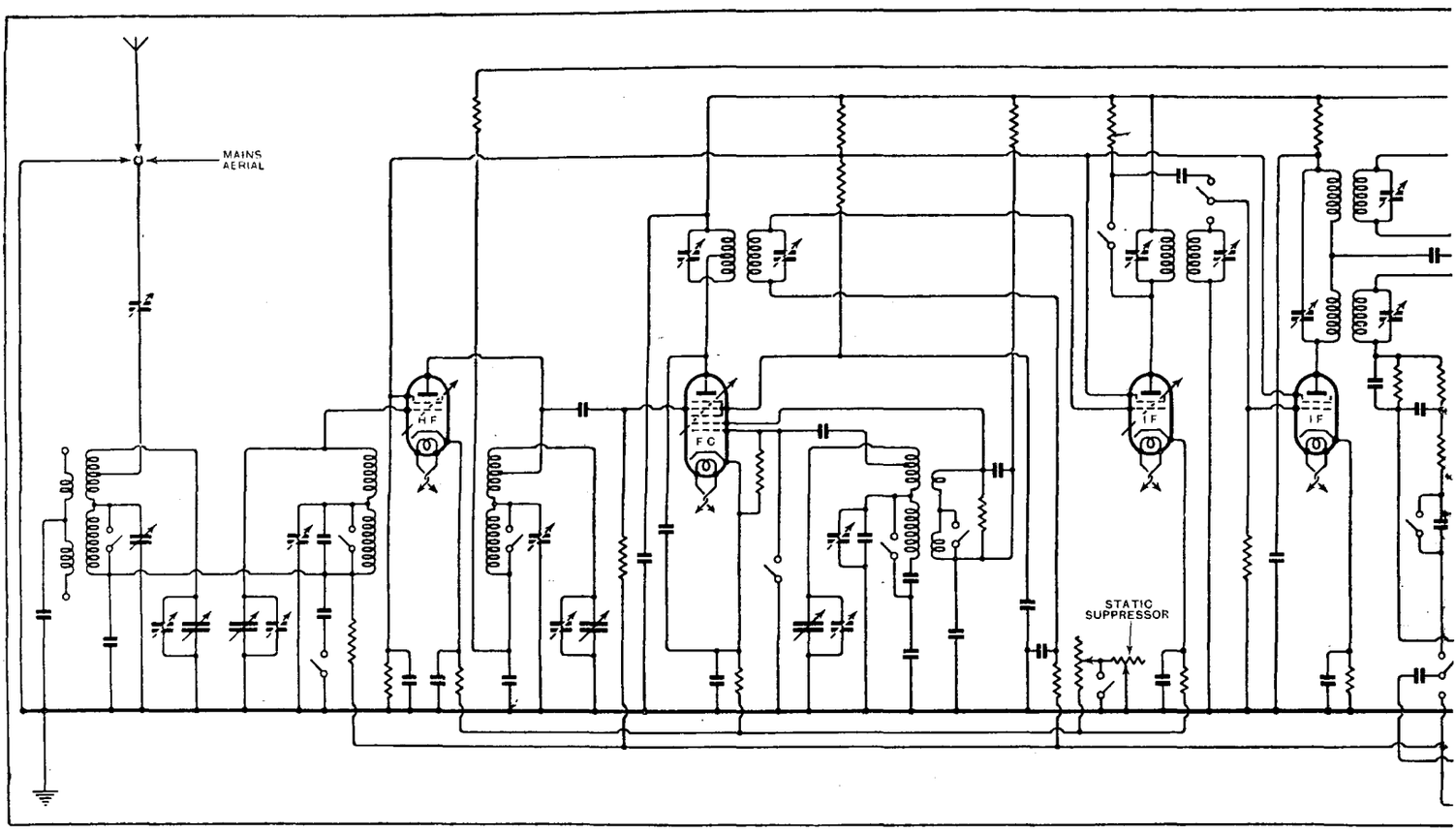

Interesting features of the circuit are the provision for an anti-static aerial system, the use of separate double-diode-triode valves for second detection and

gramophone

MODEL 292

pulled up into the "High-Fidelity" position no fewer than five distinct changes are made in the circuit arrangement, as follows: (1) Capacity is added to the coupling of the input band-pass filter. (2) The tuned transformer in the first IF stage is disconnected and resistance-capacity coupling substituted. (3) A series condenser in the input circuit to the second detector diode is short-circuited to increase bass response. (4) Feed-back is introduced between the loud-speaker speech coil and the primary of the LF coupling transformer to increase high-note response. (5) The shunt condenser across the secondary of this transformer is disconnected.

Apart from this, the circuit is full of interesting details. The aerial input circuit, for instance, is designed to accommodate the EMI Anti-static Aerial Equipment No. 2 with screened lead-in for use in cases of severe local interference from electrical machinery.

The tone control is of the duplex type with separate adjustment of bass and treble on either side of the mid-position. A subsidiary tone control is also ganged with the volume control to preserve the balance of tone in the bass as volume is reduced.

It will be seen that two double-diode-triode valves are employed. The first of these is used for signal rectification and LF amplification, and the diodes are connected in parallel. In the second valve one of the diodes and the triode provide "quiet" inter-carrier tuning by over-biasing the grid of the triode in the previous valve, while the remaining diode provides delayed AVC bias to the first three stages in the set. The second IF stage is not controlled.

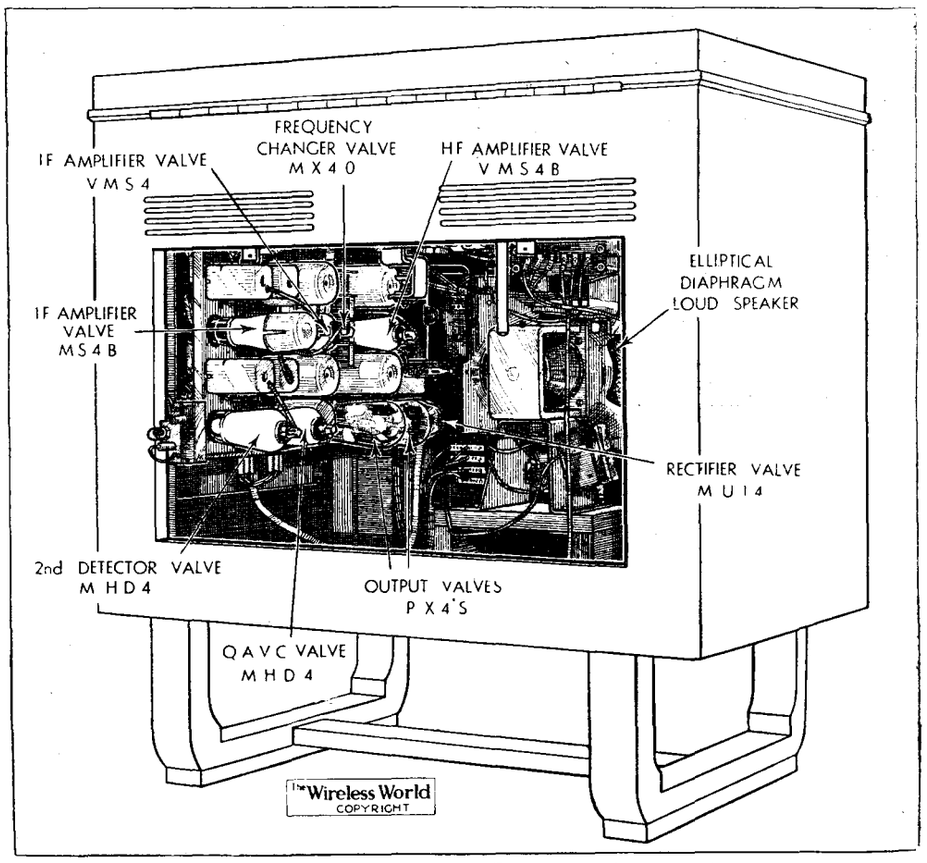

The chassis is mounted on the side of the cabinet to facilitate the arrangement of the controls on the motor board. Note the massive field magnet of the elliptical diaphragm loud speaker.

The tuning indicator is actuated by the current from the QAVC valve as well as the HF amplifier, so that the range of indication is extended over weak as well as strong signals.

The range is all that might be expected from the circuit specification, and a wide choice of stations is available with an aerial of modest dimensions. The action of the automatic volume control and noise suppressor is beyond reproach, and the performance is unblemished by second-channel and oscillator harmonic whistles.

On the gramophone side the characteristics of the pick-up are modified by a matching unit and do full justice to the loud speaker and the quality of modern records. The volume control is mounted outside the cabinet, and it incorporates a push button by means of which a record may be rejected without lifting the lid. A feature of the record-changing mechanism, which is not general, is that it can be switched out of action for hand operation if desired.

From every point of view, not excluding the quality of the cabinet work, this instrument is a sound and well-finished job, and, as such, is unquestionably good value for money.

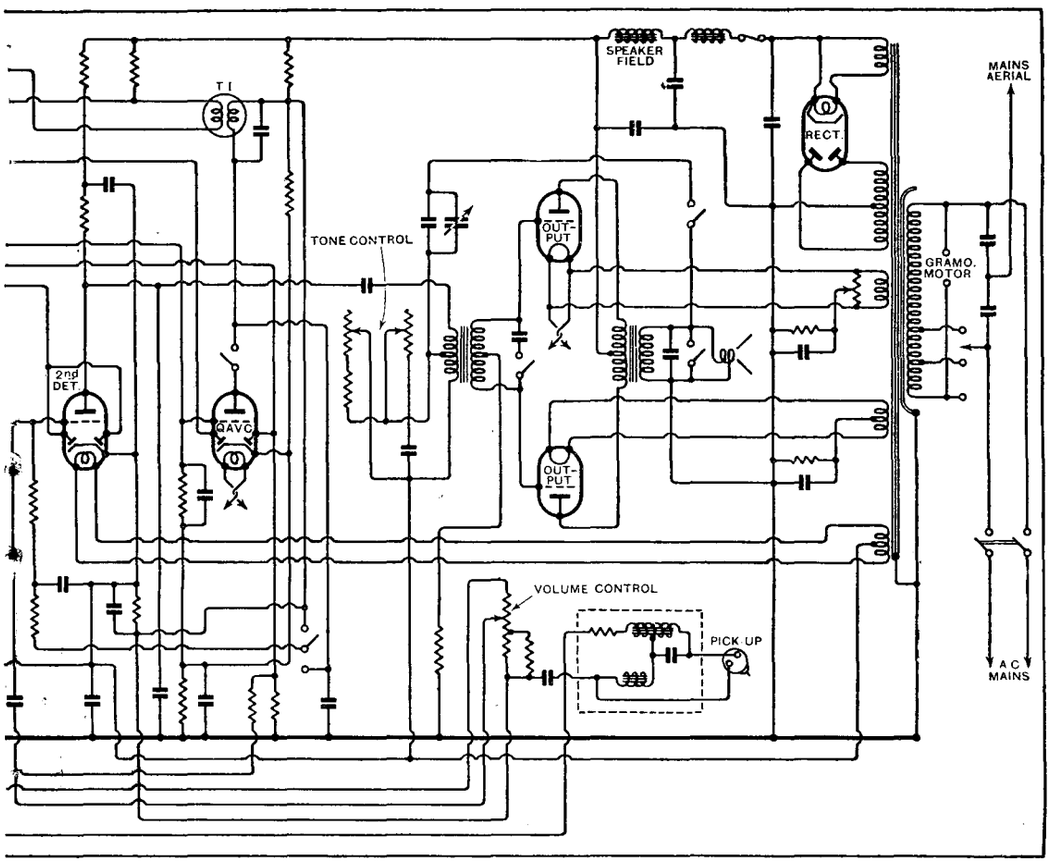

QAVC and the methods which have been adopted for changing from selective to high-fidelity reception.

UNBIASED

By FREE GRID

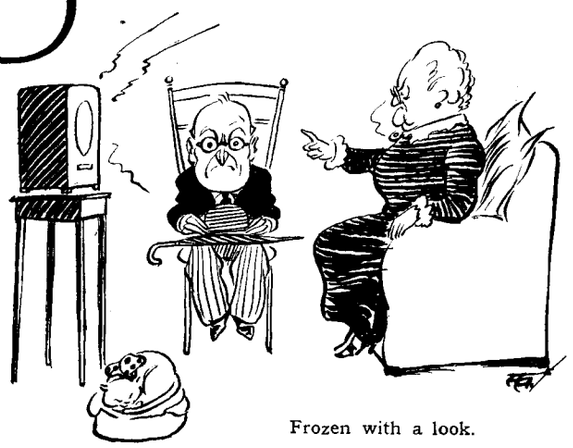

Frozen with a look.

Proletarian Discs

IF my informant is trustworthy an astonishing "revelation" of the attitude of mind of the B.B.C. towards its broadcasts of gramophone records has come my way. He alleges that the authorities at Broadcasting House have for some considerable time past been obtaining their "selections" on the records sold at the sixpenny stores instead of the more plutocratic type which their announcements might lead us to suppose.

The man who brought this state of affairs to my notice had for a long time suspected that something of the sort was going on, and with true scientific fervour had set out to prove it. To do this he purchased a complete library of first-class records and their proletarian counterparts. He then rigged up the necessary pick-up connections on his set so that he could superimpose the music of the records on to that coming in *via* radio.

Of course, this is a perfectly straightforward thing to do from a technical point of view, as it is only necessary to use two amplifiers and connect the loud speaker to the output of both. However, he had devised a simpler and cheaper method consisting of connecting the pick-up across the grid-filament circuit of the first LF valve in parallel with the existing secondary of the transformer which coupled it to the preceding detector.

His practice was to wait until the B.B.C. announced the title of a certain record. Then, quickly placing on his

Attempted to synchronise.

turntable a plutocratic copy of the same record, he attempted to synchronise the two—a perfectly simple thing to do if the records had been identical. He has, however, been completely unable to achieve this desirable end, and in every case had had a lot left over when the B.B.C. record finished, thus (as he says) proving conclusively that the Corporation was using less expensive and shorter records of the particular musical item concerned. To make assurance doubly sure, he had waited until each record was repeated on a further occasion and had then attempted to synchronise it with a proletarian counterpart; in every case it fitted like a glove.

This state of affairs is so grave that I feel I must confirm his results myself. At present my experiments are held up for lack of good records and if, therefore, any of you who have the interests of truth and honesty at heart feel that you would like to make good this deficiency there is, of course, no law in the land to stop you.

In Memoriam

MAY I take this opportunity of thanking all those kind friends and readers who, during the so-called festive season, have sent me Christmas cards and floral tributes. The latter, although doubtless well meant, are rather anticipatory, as I have no intention at present of further adding to the already engorged bank balances of the morticians who, with ghoulish glee, look upon this season of greed and gluttony as their greatest ally. May I wish everybody as happy a New Year as can be expected?

A Night Out

AS Shakespeare once remarked in an inspired moment, "some kinds of music make me sick and you sick, while some sort is noble and grand," and I cannot help thinking that, in this, the national bard must have had some uncanny prevision of the ultra-modern music of the twentieth century.

Although I am fairly tolerant of other people's likes and dislikes and am reasonably intelligent, there are some musical extravaganzas which make my gorge rise. I hate extremes of any kind, no matter whether they come from the Right or the Left; consequently Bach and Bartok are both anathema to me.

It was, therefore, with mingled feelings that I accepted an invitation from an acid Aunt of mine to attend at her domicile, which she misnames home, to listen to a concert of modern music to be given from one of the Teutonic stations. The great attraction was that the composer himself was to conduct the effort (it was, by the way, neither Bach nor Bartok) and his classic features were to be simultaneously televised on another wavelength. I could not, in common decency, refuse as I have expectations from the lady in question, but I turned up as late as I dared, well after the advertised time of the start of the uproar. As soon as I got in the house I was astonished to find my ears assailed by a not unpleasant repetitive rhythmical sound. From the presence of rhythm I knew, of course, that we were not listening to the great master and strode over to the set in order to tune in the proper station. I was immediately frozen with a look and waved imperiously to a hard-backed chair. One or two feeble attempts I made at an explanation were effectively squashed by a menacing glare from my Aunt who, throughout the evening, had, above her double chins, a look of rapt attention and ethereal ecstasy.

It was not, in fact, until the end of the performance after my female relative had summed it up with the one word—"marvellous"—that I had a chance to point out that, in error, she had tuned the set to the television wavelength.

B.B.C. and the Weather

I SEE that a contributor to the Correspondence columns of a daily newspaper has been comparing the B.B.C.'s weather forecasts with reports appearing on the following day.

As a result of his investigations, carried out over a long period, he has discovered that the B.B.C. forecasts are wrong eight times out of ten. In commenting upon this editorially the journal in question makes the interesting suggestion that the B.B.C. should remedy matters by instructing their announcers always to broadcast the converse of the typed forecast which is handed to them.

The accuracy or otherwise of the report is, of course, not the responsibility of the B.B.C. at all, as they merely get it from the Meteorological Office, and in view of the fact that the newspaper in question publishes the same report, I think that, to say the least of it, the Editorial remarks are quite uncalled for. Nobody can accuse me of partisanship where the B.B.C. is concerned, but even I believe in giving the Devil his due.

Broadcast Brevities

By Our Special Correspondent

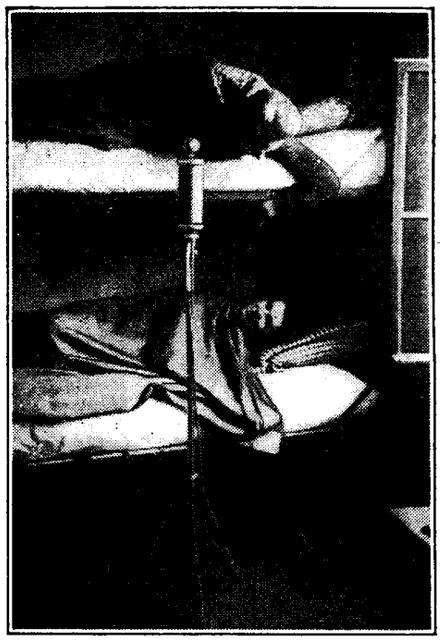

BEDTIME STORY. The last episode in a recent Deutschlandsender broadcast of "A Day in a Labour Camp."

New Year Droitwich Mystery

IT has fallen to the B.B.C. engineers, and Mr. Noel Ashbridge in particular, to provide a New Year mystery of the first magnitude.

The mystery, which is being handled very skilfully, concerns Droitwich and the fading problem. But, like all skilful weavers of mysteries, Mr. Ashbridge throws out only enough news to keep our noses to the ground.

What Steps ?

"Steps are being taken," he says, and not all my enquiries can elicit another crumb of information.

It is believed, however, that the engineers have been watching recent experiments in Germany with anti-fading aerials, and it is not unlikely that some such tests may be conducted at the new long-wave station.

Something Must Be Done

What is certain is that the engineers *must* do something. The excuse that the regular autumnal fading effect is responsible for the rise and fall of the Droitwich signals will no longer wash, for the trouble continues. Daventry never faded in January.

Electrical Recording in "Empire Exchange"

NO listener, however bored and blasé he may be in regard to the generality of broadcast programmes, could have failed to thrill during the "Empire Exchange" programme on Christmas Day, culminating in the speech of H.M. the King.

The Lowing Herd

The affair was staged with such perfect precision and absence of hitches that I suspected what now turns out to be the truth, namely, that electrical recording was resorted to in certain instances. Its use, however, was confined to background noises, such as the lowing of the cattle on the Australian farm and the sounds of the sea in Hobart, Tasmania.

In every case the speaking voice was broadcast direct.

Engineer and Diplomat

Much of the credit for the broadcast should go to Mr. L. W. Hayes, of the B.B.C., who is that rare combination, an engineer and a diplomat. It was Mr. Hayes who, with supreme vision and patience, "pulled the strings" which brought together so many voices, each representative of his own community and of the Empire as a whole.

The actual spade work on Christmas Day was in the hands of Laurance Gilliam and D. H. Munro, who worked the dramatic control panel just as if the various speakers were occupying different studios in Broadcasting House.

Key Distortion

Most readers will have noticed that in the singing of "God Save the King" the pitch appeared to vary in different parts of the Empire. I am assured that this was due entirely to atmospheric distortion, as each unit of this vast chorus was singing the National Anthem in the key of G.

Programme Controlling

MR. GLADSTONE MURRAY is now acting as Programme Controller in the absence of Colonel Alan Dawnay, who is convalescing after an indisposition.

If, for any reason, Colonel Dawnay were not to return to Broadcasting House, it is possible that this onerous post might be offered to a leading showman. The duties of the post of controlling programmes demand a very wide knowledge of the public taste, based upon experience and an indefinable *flair* for appealing to the mind and heart of the ordinary listener.

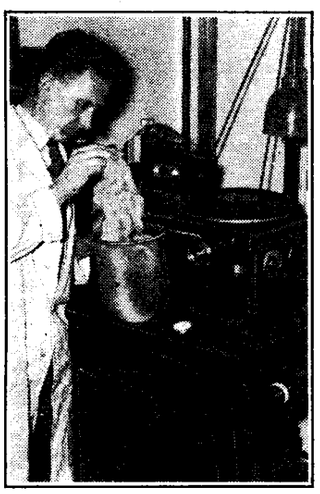

YARDS AND YARDS of wax were cut by the King's voice when records of His Majesty's speech on Christmas Day were made in triplicate at the "His Master's Voice" studios.

Mr. Murray's Future

Mr. Gladstone Murray, as Director of Public Relations, has had his fingers on the public pulse for ten years, but it remains to be seen whether he cares to make a permanency of his new job or would rather continue to exert an unseen, but none the less powerful, influence on the printed word.

The New Talks

VARIETY is a keynote of the new season's broadcast talks, which appear to cover everything from Indian politics to Saturday shopping.

The series on India provides the most imposing list of speakers. Already we have heard Sir Samuel Hoare, and to-night (Friday) at 10 o'clock, Major C. R. Attlee, M.P., will be contributing. Other leading speakers will be Sir George Schuster, Lord Lloyd of Dolobran, Mr. Isaac Foot, Mr. Winston Churchill, Mr. George Lansbury and Mr. Stanley Baldwin.

News in Retrospect

On alternate Sundays at 9 p.m. a twenty-minute review will be given of the news in retrospect. This may include items from the Law Courts, criticisms from foreign newspapers, extracts from Blue Book publications, important new scientific discoveries, and so on.

Variety

The early evening talks between 6.30 and 7.15 p.m. will include book causeries by G. K. Chesterton and E. M. Delafield; talks on "Science in the Making" by Dr. John Baker and Dr. A. S. Russell; music talks by Professor Donald F. Tovey, and Saturday evening sports talks.

Stage and Screen

Mr. S. R. Littlewood and Mr. Alistair Cooke will talk about drama and the cinema respectively.

The language talks will be continued on Tuesdays (French, M. E. M. Stephan) and Thursdays (German, Herr Max Kroemer).

A Monthly Revue

DURING the winter months the Light Entertainment Department is to provide a monthly revue. These productions will differ in type from others of this department, which already is sponsoring "The Air-do-Wells," "The Kentucky Minstrels," Concert Parties, Music Halls, Musical Comedy, etc. These monthly revues will appear at a later hour, namely, 10.0 o'clock, and will be, as opposed to broad entertainment, sophisticated productions.

A Freeman Show

The music of "January Revue" (January 14th, National) will be by Jack Strachey and Ronald Hill, and will be played by the Variety Orchestra. The entire production has been handed over to Denis Freeman.

A Miniature Organ

I HAVE had an interesting piece of news in regard to the recent broadcast of Sullivan's "Golden Legend." In order that the work should not suffer through lack of an organ, a special Compton miniature electric organ was installed at Maida Vale for this one performance. This is an example of the meticulous care which the music department bestows on its work and of the willing co-operation of musical instrument makers.

New Apparatus Reviewed

Recent Products of the Manufacturers

B.T.S. DROITWICH COIL

A DUAL-RANGE unscreened coil designed to provide a higher order of selectivity than is customary with the majority of inexpensive coils has been introduced by British Television Supplies, Ltd., Bush House, London, W.C.2. It is described as the Droitwich coil, since the opening of this high-power station has shown that many of the simpler type of sets lack the necessary selectivity to cope with the new conditions.

It consists of a bakelised tube 1½in. in diameter and 3in. long on which is wound a single-layer coil for medium-wave reception, and spaced from it a honeycomb winding forming the long-wave loading coil. The aerial is joined to the grid end of the medium-wave section through a 30 m.-mfd. condenser, and also to a separate aerial coil coupled to the long-wave section. As the series condenser is very small, for long-wave reception the aerial arrangement consists virtually of a loose coupled circuit. This particular combination provides good selectivity without adding switching complications, as a single-pole on-off switch for short-circuiting the long-wave coil suffices. There is also a reaction winding.

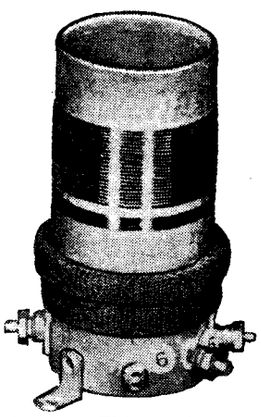

A selective dual-range unscreened coil made by British Television Supplies, Ltd.

The coil can be used as an HF coupling, the aerial section then serving as the primary winding. Tested in a simple det.-LF circuit confirmed that this coil does provide a high degree of selectivity, but there is a tendency towards lower sensitivity. This, however, can be regained by using a screen-grid valve as detector, which showed the further advantage of even better selectivity than could be obtained with a triode used in the customary manner.

A 0.0003-mfd. condenser gives adequate control of reaction, though with some valves we found that a 1,000-ohm resistor inserted between the condenser and the reaction winding was an improvement.

The wave-range using a 0.0005-mfd. tuning condenser and a normal size aerial is 185 to 550 metres and 920 to 2,270 metres medium- and long-waveband respectively.

The price of the B.T.S. Droitwich coil is 3s. 6d.

BALDWIN MICRO-HENLOG INDUCTANCE BRIDGE

THE inductance of tuning coils as used in broadcast receivers can be measured with sufficient accuracy for most commercial and experimental purposes by a low-frequency inductance bridge with which very close agreement with true values is possible, provided the apparatus is correctly designed. As a general rule, however, the most commonly required measurements are those for matching coils, and whatever instrument is used it is of greater importance that this aspect of its application should provide a high order of accuracy.

An instrument that fully meets these requirements is the Micro-Henlog inductance bridge made by the Baldwin Instrument Co., Welling, Kent. It is a low-frequency type bridge, made in two patterns, viz., Radio and Standard; each has two ranges, the Radio model reading from 50 to 3,200 microhenrys in two steps, while the Standard has a coverage of 20 to 20,000 microhenrys.

The former is especially suitable for radio test rooms, service departments, experimental, and set design use where the usual type of tuning coils require to be measured, checked and matched, as the scale is very open, so small differences in inductance are readily determinable.

The complete apparatus comprises a bridge, an 800 c/s oscillator, and a single-valve amplifier; the latter, though not essential, is very useful in obtaining an accurate balance which is made by aural means with headphones.

Tests have been made with a Radio model of the bridge, and we are particularly impressed with the simplicity of its operation and the rapidity with which measurements and matching of all types of coils can be effected.

With the bridge inductance values are obtained that agree very closely indeed with those derived from alternative methods at radio frequencies, the accuracy of these measurements, so far as actual values are concerned, being quite adequate for normal purposes. Coils can be matched to within 1 per cent. in inductance, the only limitation being the accuracy of reading the scale.

With some coils connected we found a filter very helpful in obtaining a well-defined balance, as harmonics of the oscillator tend to obscure the true silent point of the fundamental.

After a little practice in handling the bridge it would no doubt be quite easy to achieve a balance without this, but it is useful to know that the makers can supply a filter if required.

The apparatus is available in several different forms, some units being combined in one case. Separately, the prices are £12 for the bridge, £8 10s. for the oscillator unit, and £1 10s. for the amplifier; these are battery-operated.

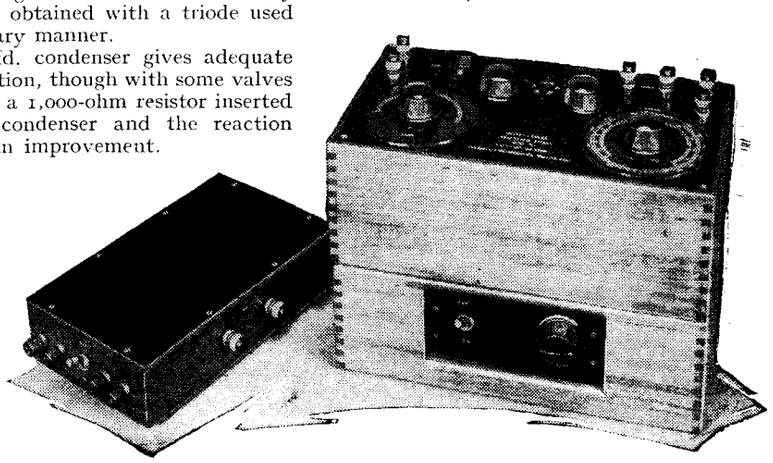

Baldwin Micro-Henlog inductance bridge, oscillator and amplifier; the bridge unit is shown mounted on the amplifier.

BAKER "HOME CONSTRUCTOR'S" LOUD SPEAKER

WE have often urged in the pages of this journal that manufacturers of components for the constructor should omit all details of finish which might add unnecessarily to the cost of production. This policy has been pursued in the latest Baker loud speaker, and as a result it has been found possible to produce a thoroughly sound and robust job at the very reasonable price of 19s. 6d.

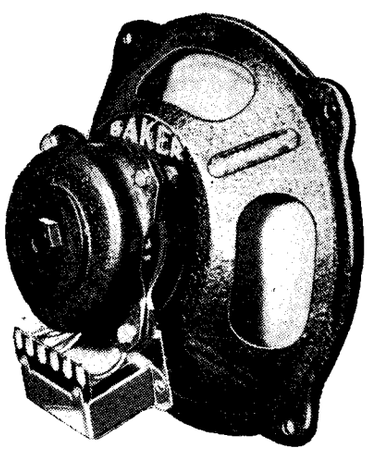

Baker "Home Constructor's" energised moving-coil loud speaker.

The unit is of the energised type and may be obtained with 2,500-ohm or 6,500-ohm windings. The field coil is of unusually generous proportions, and is well ventilated. A three-ratio output transformer for matching to low- and medium-impedance triodes and to pentodes is fitted.

Tested on the oscillator the unit was found to have a good response from 70 to 6,000 cycles, with only three noticeable peaks at approximately 90, 1,500 and 4,500 cycles. With the correct field voltage the efficiency was well up to standard and the coil showed no signs of overheating.

The makers are Baker's Selhurst Radio, Ltd., 75 and 77, Sussex Road, Croydon, Surrey.

FOUNDATIONS OF WIRELESS

VII.—Leading to the Tuned Circuit

(Continued from page 564 of December 28th issue)

THE present article deals mainly with the characteristics of AC circuits containing capacity, inductance, and resistance, and thus helps the reader towards an understanding of the behaviour of tuned circuits in practical wireless reception.

By A. L. M. SOWERBY, M.Sc.

IN Part VI of this series we discussed fairly fully the combination of resistance in series with capacity, after which it will not be necessary to make any detailed examination of the very similar combination of resistance with inductance. In the circuit shown in Fig. 32, the generator E will drive some current I through the circuit. The voltage across r will be Ir, and this will be in phase with the current. Across the inductance the voltage will be IX, where X is the reactance, $2\pi fL$, of the coil at the frequency of the generator. This voltage will be 90° out of phase with the current, and hence also 90° out of phase with the voltage Ir. These two voltages, Ir and IX, must together be equal to E, the voltage of the generator, but as their maxima do not occur at the same instant of time owing to their phase difference (see Fig. 30 of previous instalment) their joint existence will not give rise to a combined voltage equal to their simple sum. Their phase-difference being exactly 90°, we can find E by combining them in the roundabout manner now beginning to become familiar: $E=\sqrt{(IX)^2+(Ir)^2}$. This can also be written $E=I\sqrt{X^2+r^2}$, showing that the impedance Z of this circuit is $\sqrt{X^2+r^2}$.

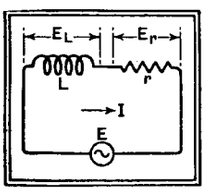

Fig. 32.—Inductance and resistance in series with a source of AC voltage. Compare with Fig. 29 and the curve of Fig. 30.

Inductance and Resistance

Comparing this with the case of the condenser, we find that the same formula applies in both cases, since both are examples of the combination of voltages differing in phase by 90°. Problems involving an inductance in series with a resistance are therefore treated in exactly the same way as those depending on a resistance in series with a condenser.

It is particularly to be noticed that inductance must always be associated with resistance in any practical case, even if the resistance is only the DC resistance of the wire with which the coil is wound. Although the two are in reality inextricably mixed up, it is satisfactory for purposes of calculation to regard any actual coil as a pure inductance in series with a pure resistance, as in the circuit of Fig. 32.

If a condenser (or an inductance) is connected, in parallel with a resistance, across a source of alternating or high-frequency voltage, each branch will draw its own current independently of the other. These currents will be E/r and E/X, where X is the reactance of the coil or condenser (Fig. 33). Since, like the voltages in Figs. 30 and 32, the two are not in phase, they cannot be added directly. That is, the magnitude of the total current is *not* equal to $E(1/r+1/X)$. So long as the resistance is a pure resistance, and the reactance a pure reactance, so that the two currents are exactly 90° out of phase, the total current is given by $I=E\sqrt{(1/r)^2+(1/X)^2}$. The impedance of r and X in parallel is, therefore, $1\sqrt{(1/r)^2+(1/X)^2}$, which may be simplified to $Z=Xr/\sqrt{r^2+X^2}$.

We thus have:

Resistance and Reactance in Series:

$$Z=\sqrt{X^2+r^2}$$

Resistance and Reactance in Parallel:

$$Z=Xr/\sqrt{X^2+r^2}.$$

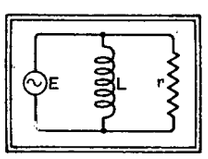

Fig. 33.—Inductance and resistance in parallel. The combined impedance is given by $1/Z=\sqrt{(1/r)^2+(1/X)^2}$.

It is particularly to be noted that this addition of squares only applies to the simple case where the two currents or voltages involved are exactly 90° out of phase; the further combination of one of these results with another reactance or resistance requires considerably more advanced methods than we propose to discuss here. The simple cases dealt with cover, fortunately, practically all ordinary wireless problems.

We have already seen that, in any alternating-current or high-frequency circuit, power is only consumed when a current flows through a resistance. In this case voltage and current are in phase, and the power is equal to the product EI, both being expressed in RMS units. In any purely reactive circuit current and voltage are 90° out of phase, and the power consumed is zero. When both resistance and reactance are present together the phase difference lies between 90° and 0°, as in Fig. 30, from which we conclude that the magnitude of the power consumed lies between zero and the product EI. It can be calculated by multiplying EI by a factor, always less than unity, that depends on the phase angle. But it is usually easier to find the current flowing through the circuit as a whole, and to multiply this by the voltage dropped across the resistive elements, ignoring entirely the voltage lost across the capacity or inductance.

If, in Fig. 32, $X=100\Omega$ and $r=100\Omega$, the total impedance $Z=\sqrt{100^2+100^2}=141.4\Omega$. If $E=200$ v., $I=E/Z=1.414$ amps. The voltage dropped across the coil is $IX=141.4$ v., but as it is known to be at 90° to the current, no power is consumed here. Across the resistance the voltage-drop is $Ir=141.4$ v., implying the consumption of $I\times Ir$ or $I^2r=200$ watts. This is the sole consumption of power in the circuit. The same method of determining the power can be applied to any complex circuit in which we may happen to be interested.

In brief, power in AC circuits is given by I^2r, but *not* by EI or E^2/r. The symbol r means resistance only, and does *not* cover total impedance.

Inductance and Capacity

The use of inductance and capacity in combination is one of the outstanding features of any wireless circuit; it will therefore repay us to make a fairly close study of their behaviour. Fig. 34 (*a*) shows a coil and a condenser connected in series across a high-frequency generator of voltage E. As in the case of Fig. 30 (C and r in series) we will begin with the current and work backwards to find the voltage E necessary to drive it.

The dotted curve of Fig. 35 represents by the usual sine-curve, the current flowing; we have allotted to it a value of 0.25 amp. peak. Taking the reactance of

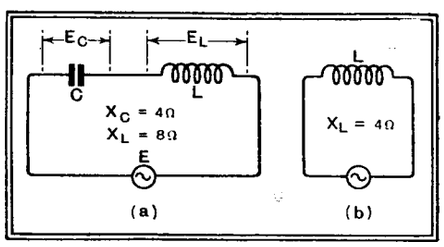

Fig. 34.—Diagram (*a*) represents inductance and capacity in series across an AC source, while diagram (*b*) shows the equivalent circuit for the values given. See Fig. 35.

Foundations of Wireless—

C as 4Ω, the voltage across it will be 1 v. peak, displaced in phase by 90° from the current. The rise and fall of this voltage with time is given by the full-line curve E_C. As required for a condenser, the current reaches its maximum a quarter of a cycle before the voltage.

The voltage across the coil, of reactance 8Ω, will be 2 v. peak, and its phase will be such that the current reaches each maximum a quarter of a cycle after the voltage. The full-line curve E_L fulfils these conditions.

It will be seen at once that the two voltages E_L and E_C are out of phase by 180°, which means that at every instant they are in opposition. If we find the sum of the two by adding the heights of the curves point by point and plotting the resulting figures we obtain for E (the generator voltage necessary to drive the assumed quarter-ampere through the circuit) the curve at the bottom of the diagram.

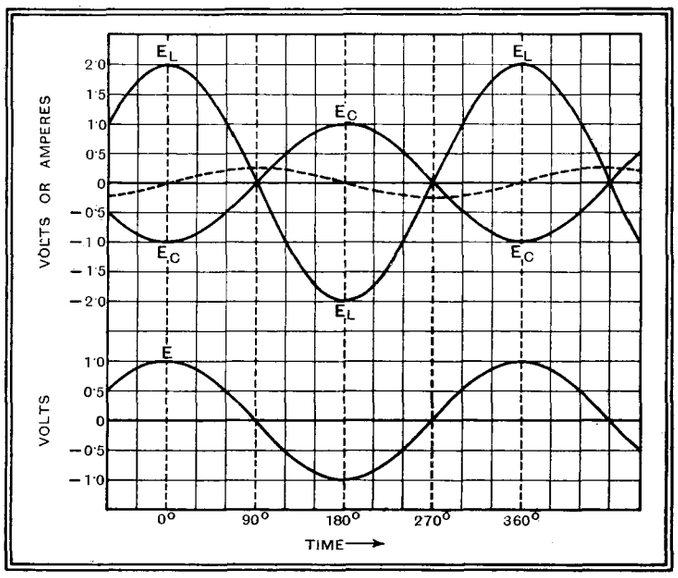

Fig. 35.—E_C and E_L represent the voltages across C and L of Fig. 34 when the current shown by the dotted curve is flowing. These voltages are at every instant in opposition and together make up to the voltage E.

In obtaining this curve it was necessary to perform a subtraction ot each point, since the two component voltages are at every instant in opposition. It is, therefore, scarcely surprising to find that the voltage required for the generator has the phase of the larger of the two voltages and is equal in magnitude to the difference of the two. The peak value of E is 1 volt, and its phase with respect to the current is that of the voltage across the inductance.

Total Reactance

The same voltage and current relations that we find for the complete circuit could therefore equally well have been produced by applying 1 volt to a coil of reactance 4 ohms, as in Fig. 34*b*. The capacitative reactance X_C of 4Ω has exactly nullified 4 of the original 8 ohms of the inductive reactance X_L, leaving 4Ω of inductive reactance still effective. We therefore conclude that the total reactance of a series combination of L and C is given by:

$$X = X_L - X_C$$

If we had made $X_L = 4\Omega$ and $X_C = 8\Omega$ in the original example, we should have found the circuit equivalent to a condenser of reactance 4 ohms. Applying the same rule, the total reactance would now be $(X_L - X_C) = (4 - 8) = -4\Omega$. As a physical entity, a negative reactance is meaningless, but the statement of the total reactance in these terms is, nevertheless, accepted as correct, the minus sign being conventionally taken to indicate that the combined reactance is capacitative.

The conclusion that by inserting a condenser of reactance 4Ω in series with a coil of reactance 8Ω, the total reactance of the circuit is *reduced*, enabling the generator to drive through it a greater current, may seem contrary to all reason and good sense. The truth of the proposition is proved definitely enough by the argument based on the curves of Fig. 35, but these curves do not necessarily yield a clear mental picture of the mechanism of the circuit, nor explain exactly why putting an extra barrier in the path of the current should enable it to flow more readily.

The explanation of the apparent absurdity is found in the fact that at any particular instant when L is checking the rise of the current, a discharge from C is helping it along. Similarly, at any moment when L is trying to maintain the current by opposing its fall in magnitude, C is counteracting its efforts by absorbing as charging-current the energy being returned by L to the circuit.

L, C and *r* in Series

We have seen that the combination of a coil and a condenser in series is always equivalent either to a coil alone or to a condenser alone. It follows that the current through such a combination will always be 90° out of phase with the voltage across it, so that we can combine the whole with a resistance in the same manner as any other reactance. To find the total impedance of the circuit of Fig. 36, for example, we have first to find the reactance X equivalent to X_L and X_C taken together; $X = X_L - X_C$. To bring in the resistance we use the formula $Z = \sqrt{X^2 + r^2} = \sqrt{(X_L - X_C)^2 + r^2}$. There is no more complication here than in combining a resistance with a simple reactance.

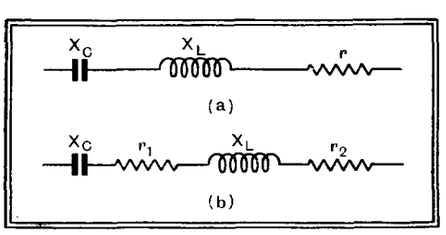

Fig. 36. Capacity, inductance and resistance in series. For (*a*), $Z^2 = (X_L - X_C)^2 + r^2$. For (*b*), $Z^2 = (X_L - X_C)^2 + (r_1 + r_2)^2$.

Faced with a circuit like that of Fig. 36 *b*, we might feel inclined to begin by combining r_1 with X_L and r_2 with X_C, afterwards combining the two results. But a little consideration will show that neither of these pairs would be either a pure resistance or a pure reactance, so that we should have no immediate knowledge of the relative phases of the voltages across them. The final stage of the process would, therefore, be outside the range of the methods we have discussed. We get round the difficulty by first finding the total reactance of the circuit by adding X_L and X_C, then finding the total resistance by adding r_1 and r_2, and finally working out the impedance as for any other simple combination of reactance and resistance. The fact that neither the two reactances nor the two resistances are neighbours in the circuit does not have to be taken into consideration, since the same current flows through all in series.

A Correction.—The author expresses his regret that an error occurred in Fig. 21 (Part V of this series). The meter M should be connected in series with one of the leads joining the reversing switch and condenser. This is because the meter is for the purpose of demonstrating reversals of current in the manner described in the text; it cannot do this when connected on the battery side of the switch.

A New Sunbeam Receiver

THE new Model 57 universal receiver is described in a leaflet issued by Sunbeam Electric, Ltd., Park Royal Road, London, N.W.10. This set, which is based on the earlier Model 55 and is sold at the same price of 10 guineas, incorporates several improvements designed to give increased selectivity. The intermediate frequency has been changed from 456 to 110 kc/s and a three-gang condenser takes the place of the original two-gang. A band-pass input filter precedes the octode frequency changer and the IF stage is reflexed to provide LF amplification. The cabinet design remains unchanged, but the main tuning knob is now mounted separately from the "aeroplane light-ray" tuning scale.

A radio-gramophone incorporating the Model 57 chassis has also been introduced, and the price is 19 guineas for universal mains or 18 guineas for AC mains only.

Photoelectric Cells (3rd Edition), by Norman Robert Campbell and Dorothy Ritchie.—This is the latest edition of a well-known work, and the text has been considerably revised in order to embrace the latest theories and practices. The book deals with the subject from the point of view of research workers, engineers and students. Pp. 223, with 69 diagrams. Published by Sir Isaac Pitman and Sons, Ltd., Parker Street, Kingsway, London, W.C.2. Price 12s. 6d. net.

PRINCIPAL BROADCASTING STATIONS OF EUROPE

Arranged in Order of Frequency and Wavelength

(Stations with an aerial power of 50 kW. and above in heavy type)

Station.	kc/s.	Tuning Positions.	Metres.	kW.
Kaunas (Lithuania)	155		**1935**	**7**
Brazov (Romania)	160		**1875**	**20**
Huizen (Holland). (*Until* 3.40 *p.m.*)	160		**1875**	**7**
Kootwijk (Holland) (*Announced Huizen*). (3.40 *p.m. onwards*)	160		**1875**	**50**
Lahti (Finland)	166		**1807**	**40**
Moscow, No. 1, RW1 (Komintern) (U.S.S.R.)	174		**1724**	**500**
Paris (Radio Paris) (France)	182		**1648**	**75**
Istanbul (Turkey)	187.5		**1600**	**5**
Berlin (Deutschlandsender Zeesen) (Germany) (*S.-w. Stns.*, 16.89, 19.73, 25.51, 31.38 *and* 49.83 *m.*)	191		**1571**	**60**
Droitwich	200		**1500**	**150**
Minsk, RW10 (U.S.S.R.)	208		**1442**	**35**
Reykjavik (Iceland)	208		**1442**	**16**
Paris (Eiffel Tower) (France)	215		**1395**	**13**
Motala (Sweden). (*Relays Stockholm*)	216		**1389**	**30**
Novosibirsk, RW76 (U.S.S.R.)	217·5		**1379**	**100**
Warsaw, No. 1 (Raszyn) (Poland)	224		**1339**	**120**
Ankara (Turkey)	230		**1304**	**7**
Luxembourg	230		**1304**	**150**
Kharkov, RW20 (U.S.S.R.)	232		**1293**	**20**
Kalundborg (Denmark) (*S.-w. Stn.*, 49.5 *m.*)	238		**1261**	**60**
Leningrad, RW53 (Kolpino) (U.S.S.R.)	245		**1224**	**100**
Tashkent, RW11 (U.S.S.R.)	256.4		**1170**	**25**
Oslo (Norway)	260		**1154**	**60**
Moscow, No. 2, RW49 (Stchelkovo) (U.S.S.R.)	271		**1107**	**100**
Tiflis, RW7 (U.S.S.R.)	280		**1071.4**	**35**
Rostov-on-Don, RW12 (U.S.S.R.)	355		**845**	**20**
Sverdlovsk, RW5 (U.S.S.R.)	375		**800**	**50**
Geneva (Switzerland). (*Relays Sottens*)	401		**748**	**1.3**
Moscow, No. 3 (RCZ) (U.S.S.R.)	401		**748**	**100**
Voroneje, RW25 (U.S.S.R.)	413.5		**726**	**10**
Oulu (Finland)	431		**696**	**2**
Ufa, RW22 (U.S.S.R.)	436		**688**	**10**
Hamar (Norway) (*Relays Oslo*)	519		**578**	**0.7**
Innsbruck (Austria). (*Relays Vienna*)	519		**578**	**0.5**
Ljubljana (Yugoslavia)	527		**569.3**	**5**
Viipuri (Finland)	527		**569.3**	**13**
Bolzano (Italy)	536		**559.7**	**1**
Wilno (Poland)	536		**559.7**	**16**
Budapest, No. 1 (Hungary)	546		**549.5**	**120**
Beromünster (Switzerland)	556		**539.6**	**100**
Athlone (Irish Free State)	565		**531**	**60**
Palermo (Italy)	565		**531**	**4**
Stuttgart (Mühlacker) (Germany)	574		**522.6**	**100**
Grenoble, P.T.T. (France)	583		**514.6**	**15**
Riga (Latvia)	583		**514.6**	**15**
Vienna (Bisamberg) (Austria)	592		**506.8**	**120**
Rabat (Radio Maroc) (Morocco)	601		**499.2**	**6.5**
Sundsvall (Sweden). (*Relays Stockholm*)	601		**499.2**	**10**
Florence (Italy). (*Relays Milan*)	609		**492.6**	**20**
Cairo (Abu Zabal) (Egypt)	620		**483.9**	**20**
Brussels, No. 1 (Belgium). (*French Programme*)	620		**483.9**	**15**
Lisbon (Bacarena) (Portugal)	629		**473.9**	**15**
Tröndelag (Norway)	629		**476.9**	**20**
Prague, No. 1 (Czechoslovakia)	638		**470.2**	**120**
Lyons, P.T.T. (La Doua) (France)	648		**463**	**15**
Cologne (Langenberg) (Germany)	658		**455.9**	**100**
North Regional (Slaithwaite)	668		**449.1**	**50**
Sottens (Radio Suisse Romande) (Switzerland)	677		**443.1**	**25**
Belgrade (Yugoslavia)	686		**437.3**	**2.5**
Paris, P.T.T. (Ecole Supérieure) (France)	695		**431.7**	**7**
Stockholm (Sweden)	704		**426.1**	**55**
Rome, No. 1 (Italy) (*S.-w. stn.*, 25.4 *m.*)	713		**420.8**	**50**
Kiev, RW9 (U.S.S.R.)	722		**415.5**	**36**
Tallinn (Esthonia)	731		**410.4**	**20**
Madrid, EAJ2 (Radio España) (Spain)	731		**410.4**	**3**
Munich (Germany)	740		**405.4**	**100**
Marseilles, P.T.T. (France)	749		**400.5**	**1.6**
Katowice (Poland)	758		**395.3**	**12**
Midland Regional (Daventry)	767		**391.1**	**25**
Toulouse, P.T.T. (France)	776		**386.6**	**0.7**
Leipzig (Germany)	785		**382.2**	**120**
Barcelona, EAJ1 (Spain)	795		**377.4**	**5**
Lwow (Poland)	795		**377.4**	**16**
Scottish Regional (Falkirk)	804		**373.1**	**50**
Milan (Italy)	814		**368.6**	**50**
Bucharest (Romania)	823		**364.5**	**12**
Moscow, No. 4, RW39 (Stalina) (U.S.S.R.)	832		**360.6**	**100**
Berlin (Funkstunde Tegel) (Germany)	841		**356.7**	**100**
Bergen (Norway)	850		**352.9**	**1**
Sofia (Bulgaria)	850		**352.9**	**1**
Valencia (Spain)	850		**352.9**	**1.5**
Simferopol, RW52 (U.S.S.R.)	859		**349.2**	**10**
Strasbourg, P.T.T. (France)	859		**349.2**	**15**
Poznan (Poland)	868		**345.6**	**16**
London Regional (Brookmans Park)	877		**342.1**	**50**
Graz (Austria). (*Relays Vienna*)	886		**338.6**	**7**
Limoges, P.T.T. (France)	895		**335.2**	**0.5**
Helsinki (Finland)	895		**335.2**	**10**
Hamburg (Germany)	904		**331.9**	**100**
Toulouse (Radio Toulouse) (France)	913		**328.6**	**60**
Brno (Czechoslovakia)	922		**325.4**	**32**
Brussels, No. 2 (Belgium). (*Flemish Prog'mme*)	932		**321.9**	**15**
Algiers, P.T.T. (Radio Alger) (Algeria)	941		**318.8**	**12**
Göteborg (Sweden). (*Relays Stockholm*)	941		**318.8**	**10**
Breslau (Germany)	950		**315.8**	**17**
Paris (Poste Parisien) (France)	959		**312.8**	**100**
West Regional (Washford Cross)	977		**307.1**	**50**
Cracow (Poland)	986		**304.3**	**2**
Genoa (Italy). (*Relays Milan*)	986		**304.3**	**10**
Hilversum (Holland). (7 *kW.* till 6.40 p.m.)	995		**301.5**	**20**
Bratislava (Czechoslovakia)	1004		**298.8**	**13.5**
North National (Slaithwaite)	1013		**296.2**	**50**
Barcelona, EAJ15 (Radio Asociación) (Spain)	1022		**293.5**	**3**
Königsberg (Heilsberg Ermland) (Germany)	1031		**291**	**60**
Parede (Radio Club Português) (Portugal)	1031		**291**	**5**
Leningrad, No. 2, RW70 (U.S.S.R.)	1040		**288.5**	**10**
Scottish National (Falkirk)	1050		**285.7**	**50**
Bari (Italy)	1059		**283.3**	**20**
Tiraspol, RW57 (U.S.S.R.)	1068		**280.9**	**4**
Bordeaux, P.T.T. (Lafayette) (France)	1077		**278.6**	**12**
Zagreb (Yugoslavia)	1086		**276.2**	**0.7**
Falun (Sweden)	1086		**276.2**	**2**
Madrid, EAJ7 (Union Radio) (Spain)	1095		**274**	**7**
Madona (Latvia)	1104		**271.7**	**50**
Naples (Italy). (*Relays Rome*)	1104		**271.7**	**1.5**
Moravska-Ostrava (Czechoslovakia)	1113		**269.5**	**11.2**
Alexandria (Egypt)	1122		**267.4**	**0.25**
Belfast	1122		**267.4**	**1**
Nyiregyhaza (Hungary)	1122		**267.4**	**6.2**
Hörby (Sweden). (*Relays Stockholm*)	1131		**265.3**	**10**
Turin, No. 1 (Italy). (*Relays Milan*)	1140		**263.2**	**7**
London National (Brookmans Park)	1149		**261.1**	**50**
West National (Washford Cross)	1149		**261.1**	**50**
Kosice (Czechoslovakia). (*Relays Prague*)	1158		**259.1**	**2.6**
Monte Ceneri (Switzerland)	1167		**257.1**	**15**
Copenhagen (Denmark). (*Relays Kalundborg*)	1176		**255.1**	**10**
Kharkov, No. 2, RW4 (U.S.S.R.)	1185		**253.2**	**10**
Frankfurt (Germany)	1195		**251**	**17**
Prague, No. 2 (Czechoslovakia)	1204		**249.2**	**5**
Lille, P.T.T. (France)	1213		**247.3**	**5**
Trieste (Italy)	1222		**245.5**	**10**
Gleiwitz (Germany). (*Relays Breslau*)	1231		**243.7**	**5**
Cork (Irish Free State) (*Relays Athlone*)	1240		**241.9**	**1**
Juan-les-Pins (Radio Côte d'Azur) (France)	1249		**240.2**	**2**
Rome, No. 3 (Italy)	1258		**238.5**	**1**
San Sebastian (Spain)	1258		**238.5**	**3**
Nürnberg and Augsburg (Germany) (*Relay Munich*)	1267		**236.8**	**2**
Christiansand and Stavanger (Norway)	1276		**235.1**	**0.5**
Dresden (Germany) (*Relays Leipzig*)	1285		**233.5**	**1.5**
Aberdeen	1285		**233.5**	**1**
Austrian Relay Stations	1294		**231.8**	**0.5**
Danzig. (*Relays Königsberg*)	1303		**230.2**	**0.5**
Swedish Relay Stations	1312		**228.7**	**1.25**
Budapest, No. 2 (Hungary)	1321		**227.1**	**0.8**
German Relay Stations	1330		**225.6**	**1.5**
Montpellier, P.T.T. (France)	1339		**224**	**5**
Lodz (Poland)	1339		**224**	**1.7**
Dublin (Irish Free State) (*Relays Athlone*)	1348		**222.6**	**1**
Milan, No. 2 (Italy) (*Relays Rome*)	1348		**222.6**	**4**
Turin, No. 2 (Italy). (*Relays Rome*)	1357		**221.1**	**0.2**
Basle and Berne (Switzerland)	1375		**218.2**	**0.5**
Warsaw, No. 2 (Poland)	1384		**216.8**	**2**
Lyons (Radio Lyons) (France)	1393		**215.4**	**5**
Tampere (Finland)	1420		**211.3**	**1.2**
Paris, (Radio LL) (France)	1424		**210.7**	**0.8**
Newcastle	1429		**209.9**	**1**
Béziers (France)	1429		**209.9**	**2**
Miskolc (Hungary)	1438		**208.6**	**1.25**
Fécamp (Radio Normandie) (France)	1456		**205**	**10**
Pecs (Hungary)	1465		**204.8**	**1.25**
Bournemouth	1474		**203.5**	**1**
Plymouth	1474		**203.5**	**0.3**
International Common Wave	1492		**201.1**	**0.1**
International Common Wave	1500		**200**	**0.6**
Liepàja (Latvia)	1737		**173**	**0.1**

NOTE. Since the publication of the previous list alterations have been made to the particulars of the following stations: Moravska-Ostrava (Czechoslovakia), Paris (Radio LL) (France).

SHORT-WAVE STATIONS OF THE WORLD

(N.B.—Times of Transmission given in parentheses are approximate only and represent G.M.T.)

Metres.	kc's.	Call Sign.	Station.	Tuning Positions.
70.2	4,273	RV15	Kharbarovsk (U.S.S.R.). (*Daily* 06.00 *to* 14.00.)	.....
58.31	5,145	OK1MPT	Prague (Czechoslovakia). (*Experimental*)	.....
50.27	5,968	HVJ	Vatican City. (*Daily* 19.00 *to* 19.15) ...	.....
50.0	6,000	RW59	Moscow (U.S.S.R.). (*Relays No.* 1 *Stn.*) (*Daily* 20.00 *to* 23.00.)	.....
50.0	6,000	EAJ25	Barcelona (Radio Club) (Spain). (*Sat.* 20.30 *to* 21.30.)	.....
49.96	6,005	VE9DN	Montreal (Canada). (*Daily* 04.30 *to* 05.00)	.....
49.83	6,020	DJC	Zeesen (Germany). (*Daily* 22.30 *to* 03.45, 17.00 *to* 21.45.)	.....
49.67	6,040	W1XAL	Boston, Mass. (U.S.A.). (*Daily* 22.45 *to* 00.15, *Sun.* 00.30 *to* 02.30 *also.*)	.....
49.67	6,040	W4XB	Miami Beach, Florida (U.S.A.)	.....
49.67	6,040	YDB	Sourabaya (Java). (*Daily* 03.30 *to* 06.30)	.....
49.59	6,050	GSA	Empire Broadcasting	.....
49.5	6,060	W8XAL	Cincinnati, Ohio (U.S.A.). (*Daily* 12.00 *to* 01.00, 04.00 *to* 06.00.)	.....
49.5	6,060	W3XAU	Philadelphia, Pa. (U.S.A.) (*Relays WCAU.*) (*Daily* 01.00 *to* 04.00.)	.....
49.5	6,060	VQ7LO	Nairobi (Kenya Colony). (*Daily* 16.00 *to* 19.00, *Sat. to* 20.00, *Mon., Wed., Fri.* 10.45 *to* 11.15 *also, Tues.* 08.00 *to* 09.00 *also, Thurs.* 13.00 *to* 14.00 *also.*)	.....
49.5	6,060	OXY	Skamlebaek (Denmark). (*Relays Kalundborg.*) (*Daily* 18.00 *to* 24.00.)	.....
49.43	6,069	VE9CS	Vancouver, B.C. (Canada). (*Sat.* 04.30 *to* 05.45, *Sun.* 16.00 *to* 04.00.)	.....
49.34	6,080	W9XAA	Chicago, Ill. (U.S.A.). (*Relays WCLF.*) (*Daily* 20.00 *to* 06.00.)	.....
49.22	6,095	VE9GW	Bowmanville, Ont. (Canada). (*Mon., Tues., Wed.* 20.00 *to* 05.00, *Thurs., Fri., Sat.* 12.00 *to* 05.00, *Sun.* 18.00 *to* 02.00.)	.....
49.2	6,097	ZTJ	Johannesburg (S. Africa). (*Daily ex. Sun.* 04.30 *to* 05.30, 08.30 *to* 12.00, 14.00 *to* 20.00 (*Sat. to* 21.45), *Sun.* 13.00 *to* 15.15, 17.30 *to* 20.00.)	.....
49.18	6,100	W3XAL	Bound Brook, N.Y. (U.S.A.). (*Relays WJZ.*) (*Mon., Wed., Sat.* 22.00 *to* 06.00.)	.....
49.18	6,100	W9XF	Chicago, Ill. (U.S.A.). (*Daily ex. Mon., Wed. and Sun.* 21.00 *to* 07.00.)	.....
49.1	6,109	VUC	Calcutta (India). (*Daily ex. Fri. and Sat.* 15.30 *to* 18.00, *Fri.* 14.30 *to* 15.00, *Sat.* 17.45 *to* 21.00.)	.....
49.05	6,115	IRA	Rome (Italy). (*Mon., Wed., Fri.* 23.00)...	.....
49.02	6,120	YDA	Bandoeng (Java). (*Daily* 03.30 *to* 06.30)	.....
49.02	6,120	W2XE	Wayne, N.J. (U.S.A.). (*Relays WABC.*) (*Daily* 23.00 *to* 04.00.)	.....
48.86	6,140	W8XK	Pittsburg, Pa. (U.S.A.). (*Relays KDKA.*) (*Daily* 21.30 *to* 06.00.)	.....
48.78	6,150	CJRO	Winnipeg (Canada). (*Daily* 00.00 *to* 05.00, *Sat.* 21.00 *to* 06.00 *also, Sun.* 22.00 *to* 03.30.)	.....
48.39	6,200	HJ3ABF	Bogota (Colombia)	.....
46.69	6,425	W3XL	Bound Brook, N.J. (U.S.A.). (*Experimental*)	.....
45.38	6,610	RW72	Moscow (U.S.S.R.). (*Relays Stalin Stn.*)...	.....
45.0	6,667	8KR	Constantine (Algeria)	.....
43.0	6,976	EA1AQ	Madrid (Spain). (*Tues. and Sat.* 22.00)...	.....
38.48	7,797	HBP	Radio Nations, Prangins (Switzerland). (*Sat.* 22.30 *to* 23.15.)	.....
37.33	8,035	CNR	Rabat (Morocco). (*Sun.* 20.00 *to* 22.30)...	.....
31.58	9,500	PRF5	Rio de Janeiro (Brazil). (*Daily* 22.30 *to* 23.15.)	.....
31.55	9,510	VK3ME	Melbourne (Australia). (*Wed.* 10.00 *to* 11.30, *Sat.* 10.00 *to* 12.00.)	.....
31.55	9,510	GSB	Empire Broadcasting	.....
31.48	9,530	W2XAF	Schenectady, N.Y. (U.S.A.). (*Relays WGY.*) (*Daily* 23.30 *to* 04.00.)	.....
31.45	9,540	LCL	Jelöy (Norway). (*Relays Oslo*)	.....
31.45	9,540	DJN	Zeesen (Germany). (*Daily* 08.45 *to* 12.15, 13.00 *to* 16.30, 22.15 *to* 03.45.)	.....
31.38	9,560	DJA	Zeesen (Germany). (*Daily* 13.00 *to* 16.30, 22.15 *to* 02.15, *Sun.* 09.00 *to* 10.30 *also.*)	.....
31.36	9,565	VUB	Bombay (India). (*Daily* 16.30 *to* 17.30)...	.....
31.35	9,570	W1XAZ	Springfield, Mass. (U.S.A.). (*Relays WBZ.*) (*Daily* 12.00 *to* 06.00.)	.....
31.32	9,580	GSC	Empire Broadcasting	.....
31.32	9,580	VK3LR	Lindhurst (Australia). (*Daily ex. Sun.* 08.15 *to* 12.30.)	.....
31.28	9,590	W3XAU	Philadelphia, Pa. (U.S.A.). (*Relays WCAU.*) (*Daily* 17.00 *to* 01.00.)	.....
31.28	9,590	VK2ME	Sydney (Australia). (*Sun.* 06.00 *to* 08.00, 10.00 *to* 16.00.)	.....
31.27	9,595	HBL	Radio Nations, Prangins (Switzerland). (*Sat.* 22.30 *to* 23.15.)	.....
31.25	9,600	CT1AA	Lisbon (Portugal). (*Tues., Thurs. and Sat.* 21.30 *to* 24.00.)	.....
31.0	9,677	CT1CT	Lisbon (Portugal). (*Thurs.* 21.00 *to* 23.00, *Sun.* 12.00 *to* 14.00.)	.....
30.67	9,780	IRO	Rome (Italy). (*Experimental*)	.....
30.43	9,860	EAQ	Madrid (Spain). (*Daily* 22.15 *to* 00.30, *Sat.* 18.00 *to* 20.00 *also.*)	.....
29.04	10,330	ORK	Ruysselede (Belgium). (*Daily* 19.45 *to* 21.45.)	.....
28.98	10,350	LSX	Buenos Aires (Argentina). (*Daily* 20.00 *to* 21.00.)	.....
25.6	11,720	FYA	Paris, Radio Coloniale (France). (*Colonial Stn. E-W.*) *Daily* 00.00 *to* 03.00, 04.00 *to* 06.00.)	.....
25.6	11,720	CJRX	Winnipeg (Canada). (*Daily* 00.00 *to* 05.00, *Sat.* 21.00 *to* 06.00 *also, Sun.* 22.00 *to* 03.30 *also.*)	.....
25.57	11,730	PHI	Eindhoven (Holland). (*Daily ex. Tues. and Wed.* 13.00 *to* 15.00 (*Sat. to* 15.30 ; *Sun. to* 16.00).)	.....
25.53	11,750	GSD	Empire Broadcasting	.....
25.49	11,770	DJD	Zeesen (Germany). (*Daily* 17.00 *to* 21.45)	.....
25.45	11,790	W1XAL	Boston, Mass. (U.S.A.). (*Daily* 23.00 *to* 00.30.)	.....
25.4	11,810	2RO	Rome (Prato Smeraldo) (Italy)	.....
25.36	11,830	W2XE	Wayne, N.J. (U.S.A.). (*Relays WABC.*) (*Daily* 20.00 *to* 22.00.)	.....
25.29	11,860	GSE	Empire Broadcasting	.....
25.27	11,870	W8XK	Pittsburg, Pa. (U.S.A.). (*Relays KDKA.*) (*Daily* 21.30 *to* 03.00.)	.....
25.23	11,880	FYA	Paris, Radio Coloniale (France). (*Colonial Stn. N-S.*) (*Daily* 16.15 *to* 19.15, 20.00 *to* 23.00.)	.....
25.0	12,000	RNE	Moscow (U.S.S.R.). (*Relays No.* 2 *Stn.*) (*Sun.* 03.00 *to* 04.00, 11.00 *to* 12.00, 15.00 *to* 16.00.)	.....
24.83	12,082	CT1CT	Lisbon (Portugal). (*Sun.* 14.00 *to* 16.00, *Thurs.* 20.00 *to* 21.00.)	.....
23.39	12,830	CNR	Rabat (Morocco). (*Sun.* 12.30 *to* 14.00)...	.....
19.84	15,123	HVJ	Vatican City. (*Daily* 10.00 *to* 10.15) ...	.....
19.82	15,140	GSF	Empire Broadcasting	.....
19.74	15,200	DJB	Zeesen (Germany). (*Daily* 08.45 *to* 12.15, *Sun.* 09.00 *to* 10.30 *also.*)	.....
19.72	15,210	W8XK	Pittsburg, Pa. (U.S.A.). (*Relays KDKA.*) (*Daily* 13.00 *to* 21.15.)	.....
19.71	15,220	PCJ	Eindhoven (Holland). (*Experimental*) ...	.....
19.68	15,243	FYA	Paris, Radio Coloniale (France). (*Colonial Stn. E.W.*) (*Daily* 12.00 *to* 16.00.)	.....
19.67	15,250	W1XAL	Boston, Mass. (U.S.A.). (*Daily* 15.50 *to* 18.30.)	.....
19.66	15,260	GSI	Empire Broadcasting	.....
19.64	15,270	W2XE	Wayne, N.J. (U.S.A.). (*Relays WABC.*) (*Daily* 16.00 *to* 18.00.)	.....
19.56	15,330	W2XAD	Schenectady, N.Y. (U.S.A.). (*Daily* 19.30 *to* 20.30.)	.....
17.33	17,310	W3XL	Bound Brook, N.J. (U.S.A.). (*Daily* 16.00 *to* 22.00.)	.....
16.89	17,760	DJE	Zeesen (Germany)	.....
16.87	17,780	W3XAL	Bound Brook, N.J. (U.S.A.). (*Relays WJZ.*) (*Daily* 15.00 *to* 21.00.)	.....
16.86	17,790	GSG	Empire Broadcasting	.....
13.97	21,470	GSH	Empire Broadcasting	.....
13.94	21,530	GSJ	Empire Broadcasting	.....
13.93	21,540	W8XK	Pittsburg, Pa. (U.S.A.). (*Daily* 12.00 *to* 19.00.)	.....

DROITWICH REJECTORS

Aids to Long-wave Reception

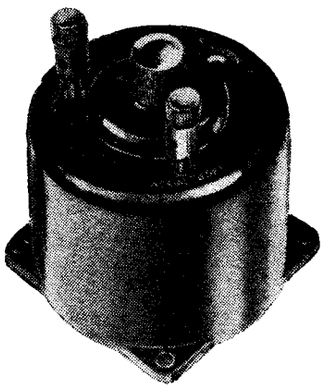

Ferranti rejector designed especially for the new Droitwich station.

OWING to the swamping effect of the new Droitwich station in certain parts of the country, Ferranti, Ltd., Hollinwood, Lancs, have extended their range of rejector units to include one designed especially for this station. Its installation entails no alteration in the wiring of the set as the rejector is interposed between the aerial and the receiver. It is brought into use merely by changing the position of one plug on the unit. In obtaining a high efficiency some curtailment in tuning range has had to be made. Separate units are supplied for different wavebands, each covering approximately 100 metres, and the price is 7s. 6d.

The Whiteley Electrical Radio Co., Ltd., Radio Works, Victoria Street, Mansfield, Notts, has introduced, also, a rejector designed especially for Droitwich. It is described as the Droitwich Suppressor and is connected between the aerial and the receiver. Plug and socket connectors are provided, and the dial has engraved on it an arrow indicating the optimum tuning point for 1,500 metres. The price is 8s. 6d.

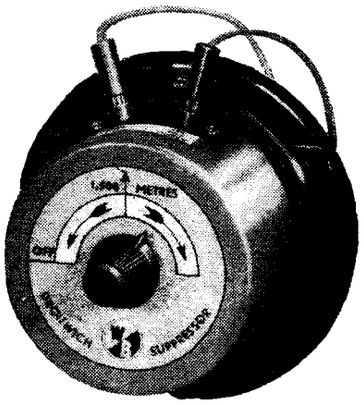

W.B. Droitwich Suppressor ; the optimum tuning for 1,500 metres is marked on the dial.

The Wireless World
THE PRACTICAL RADIO JOURNAL
24th Year of Publication

No. 802. FRIDAY, JANUARY 11TH, 1935. VOL. XXXVI. No. 2.

Proprietors : ILIFFE & SONS LTD.

Editor :
HUGH S. POCOCK.

Editorial,
Advertising and Publishing Offices :
DORSET HOUSE, STAMFORD STREET,
LONDON, S.E.1.

Telephone : Hop. 3333 (50 lines).
Telegrams : "Ethaworld, Watloo, London."

COVENTRY : Hertford Street.
Telegrams : "Autocar, Coventry." Telephone : 5210 Coventry.

BIRMINGHAM :
Guildhall Buildings, Navigation Street, 2.
Telegrams : "Autopress, Birmingham." Telephone : 2971 Midland (4 lines).

MANCHESTER : 260, Deansgate, 3.
Telegrams : "Iliffe, Manchester." Telephone : Blackfriars 4412 (4 lines).

GLASGOW : 26B, Renfield Street, C.2.
Telegrams : "Iliffe, Glasgow." Telephone : Central 4857.

PUBLISHED WEEKLY. ENTERED AS SECOND CLASS MATTER AT NEW YORK, N.Y.

Subscription Rates :
Home, £1 1s. 8d. ; Canada, £1 1s. 8d. ; other countries, £1 3s. 10d. per annum.

As many of the circuits and apparatus described in these pages are covered by patents, readers are advised, before making use of them, to satisfy themselves that they would not be infringing patents.

CONTENTS

	Page
Editorial Comment	25
Resistance-coupled Amplifiers	26
Transverse Current Microphone	29
News of the Week	31
The Bulb of Many Uses (Continued)	32
A Radio Bogy	35
Broadcast Brevities	37
New Apparatus Reviewed	38
A Useful Idea for a Milliammeter	39
Listeners' Guide for the Week	40
Unbiased	42
Drummer M65 Set Reviewed	43
Short Waves and the Amateur	45
Foundations of Wireless, VIII	46
Letters to the Editor	48
Readers' Problems	50

EDITORIAL COMMENT

Transmission of Standard Frequencies

A Reminder to the B.B.C.

EARLY last year a good deal appeared in *The Wireless World* on the subject of the transmission of standard frequencies by the B.B.C. The idea is for the B.B.C. to transmit from time to time standard frequency notes from one or more of their stations, so as to enable owners of receivers to judge the performance which they are getting and to serve as a means of educating the public to a higher appreciation of quality.

In a letter to the correspondence columns published in our issue of June 22nd, 1934, Mr. Ashbridge, the Chief Engineer of the B.B.C., discussed various aspects of the problem of quality in reproduction, and in concluding his letter stated "Finally, with regard to the transmission of a range of audio-frequencies, we have for some time past intended to reconsider this question when the Droitwich station is available."

The Droitwich station has certainly been in operation long enough now to be regarded as "available," and we hope that we may now look to the B.B.C. to adopt a scheme of this nature for the benefit of listeners. There is no doubt that interest in the transmission of standard frequencies is very strong ; the subject is constantly discussed and we are continually receiving letters from our readers on the matter.

Naturally, the general public must not be expected to appreciate all at once the significance of these transmissions, but once they have been started, we feel confident that they will achieve a wide popularity. We might even venture to predict that they will prove to be one of the most popular series of broadcasts of 1935, competing even with some of the brightest items provided by the programme compilers.

Single Sideband Broadcasting

Introduction a Remote Possibility

RECENT announcements have appeared in the daily Press suggesting that a revolutionary method of broadcast transmission might soon be adopted and that the B.B.C. were actively interested in it.

The revolutionary system on investigation turns out to be single sideband transmission, with which our readers are familiar, articles on the subject having appeared in our pages over past months. One does not, of course, know what the distant future may hold in store, but that anything like a general change-over to this system of broadcasting will be made in Europe is a possibility which need not give listeners any concern at present.

Warning!

Single sideband transmission should only be contemplated if it is adopted by agreement throughout Europe, and on the understanding that its introduction will be to facilitate higher quality transmissions and not to accommodate additional stations. We hope and believe that the B.B.C., for their part, will be very firm on this point in any international discussions in which they may take part. The urgent need to-day is for better quality, which can only come about when each station is given elbow-room on a more generous scale than at present.

RESISTANCE-COUPLED AMPLIFIERS

Selecting the Values of Components

IN spite of the fact that resistance coupling is one of the oldest forms of intervalve couplings, it is still widely used and offers great advantages over other types where the highest standard of quality of reproduction is desired. Moreover, it finds wide application for television purposes. The design of such an amplifier is more complex than is often realised, and is dealt with in detail in this article.

By W. T. COCKING

ALTHOUGH resistance - capacity coupling is often thought to be the remedy for all distortion difficulties in low-frequency amplifiers, it is not so unless the correct values are assigned to the various components. Empirical rules exist for selecting values, but they are useful only in certain cases, and are not of universal application.

In designing an amplifier there are two main types of distortion to consider—frequency and amplitude distortion—and the former is much the easier to treat. Let us, therefore, consider it first. The principle of resistance-coupled amplification is simple, and is illustrated in Fig. 1 (a). We have a valve with an amplification factor μ and an internal resistance Ra, and we apply an input voltage e to the grid circuit. A resistance R1 is included in the anode circuit and the voltage E developed across this is the voltage applied to the next stage. It is easy to see that the amplification $A = E/e$.

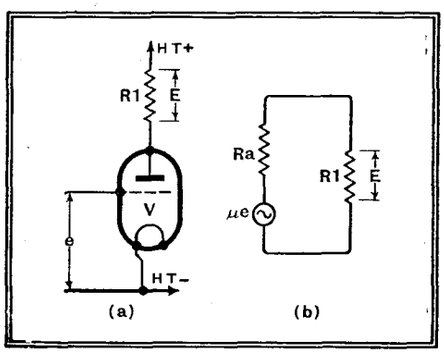

Fig. 1.—The fundamental circuit of resistance coupling is shown at (a) and the equivalent circuit at (b), in which μe and Ra are a generator and resistance which replace the valve.

When considering the action of a valve the simplest course is to represent it by a resistance equal to its internal AC resistance in series with a perfect generator supplying a voltage μe, as shown in Fig. 1 (b). It can now be seen at a glance that the fraction of the voltage μe which appears across R1 depends upon the relative values of the two resistances; expressed mathematically, $A = \mu R1/(Ra + R1)$. It can be seen that $A = \mu$ when R1 is infinitely great, and that A can never exceed this value; the amplification with resistance coupling is consequently limited by the amplification factor of the valve. When R1 is very small compared with Ra the amplification is only a small fraction of μ and is nearly proportional to R1. When R1 is greater than Ra, however, the amplification begins to approach μ, but is only affected to a small degree by changes in R1. If R1 be made equal to Ra the amplification becomes equal to one half the amplification factor of the valve ($\mu/2$). If $R1 = 3Ra$ then $A = 0.75\ \mu$; if $R1 = 10$ Ra, then $A = 0.908\ \mu$. For a variety of reasons to be discussed later it is unwise to use too high a value of coupling resistance, and R1 is not usually greater than three times Ra, so that the amplification obtained is about three-quarters of the valve amplification factor.

An amplifier of this type contains no reactances, and is consequently entirely free from frequency distortion. In practice, however, the simple circuit of Fig. 1 does not hold good, for two factors enter to introduce distortion. The first factor is the stray capacity inevitable in any practical amplifier, and the second is the coupling condenser necessary for transferring the amplified voltage to the following stage. The question of the grid leak must also be considered.

Stray Capacities

A practical stage of amplification, therefore, takes the form shown in Fig. 2, in which the valve and R1 correspond to Fig. 1. The condenser C2 is necessary to pass the variations in potential which appear across R1 to the grid of the following valve, while isolating it as far as direct current is concerned. The grid leak R2 is needed in order to permit negative grid bias to be applied to V2. The condenser C1 is rarely found as such in an amplifier, and it is usually present as a component only when V1 acts as a detector; it is, however, an inherent part of an amplifier and consists of the anode-cathode capacity of V1, the *effective* grid-cathode capacity of V2, and the stray capacities of the components and wiring. It is difficult to assess the value of this unavoidable capacity, for it depends to a large degree upon the following circuits: in a case where V1 is an MHL4 valve and V2 is a PX4, the value of C1 is of the order of 150 mmfds.

At low and medium frequencies the reactance of this capacity is usually so high in comparison with the circuit resistances that it can be ignored. At high frequencies, however, the reactance falls, and since this reduces the load impedance on the valve the amplification decreases. The presence of this capacity, therefore, sets an upper limit to the range of frequencies over which any given amplifier is useful.

Now let us consider what happens in the coupling circuit. It can be seen that C2 and R2 really form a voltage divider across R1, so that the fraction of the voltage across R1 which appears across R2 and is applied to the following valve depends upon the relative values of the reactance of C2 and the resistance of R2. It can be shown that at the frequency at which the reactance of C2 equals the resistance of R2, the voltage developed across R2 is 70.7 per cent. of that across R1. The reactance of C2 falls with increasing frequency, so that it is only necessary to consider this component at the lowest frequency needed, for the value chosen to satisfy the requirements at this frequency will be entirely satisfactory at any higher frequency.

It will be apparent that we can divide the operation of a resistance-coupled amplifier into three categories according to the frequencies concerned. At a medium frequency around 400 cycles the various capacities exert a negligible effect, and the amplification obtained depends only on the valve and resistances. At the lowest frequency required it is only necessary to employ a large enough capacity for C2 relative to the value of the grid leak R2 for the loss in the coupling to be negligible. At the highest frequency required C2 can be ignored, and we have so to proportion the values of C1 and the various resistances that negligible loss in amplification occurs.

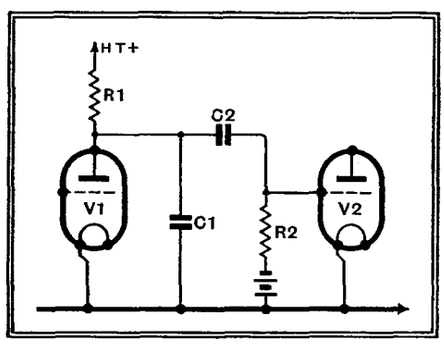

Fig. 2.—In a practical amplifier, C2 and R2 are needed to obtain the correct DC grid potential on the following valve, and the inevitable stray capacities provide C1.

The various formulæ governing the design of an amplifier of this type are given

Resistance-coupled Amplifiers—

in the table printed on the last page of this article, and their use will be best understood by an example. Suppose we wish to design a stage of exceptionally good frequency response, and we intend to use a valve of 30,000 ohms resistance for V1. The grid leak R2 cannot usually exceed 0.25 megohm if V2 is an output valve, for the valve makers often specify this figure as the maximum permissible grid to cathode resistance. If we say that the amplification at the two extremes of 20 cycles and 10,000 cycles can fall to 95

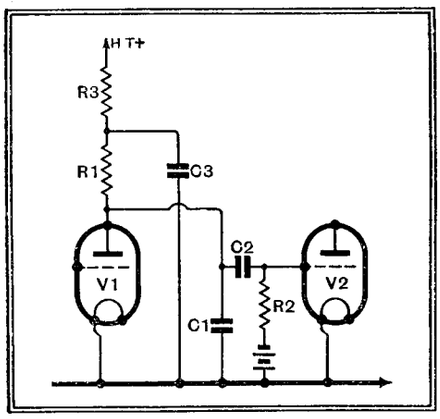

Fig. 3.—When decoupling is included the circuit takes the form shown in this illustration, where R3 and C3 are the decoupling components.

per cent. of that at about 400 cycles, we can write:—

Ra = 30,000 ohms,
R2 = 250,000 ohms,
x = 0.95 at 20 cycles and 10,000 cycles,
C1 = 150 mmfds.

We then calculate the value of r, which is the valve resistance in parallel with the coupling resistance and grid leak, from

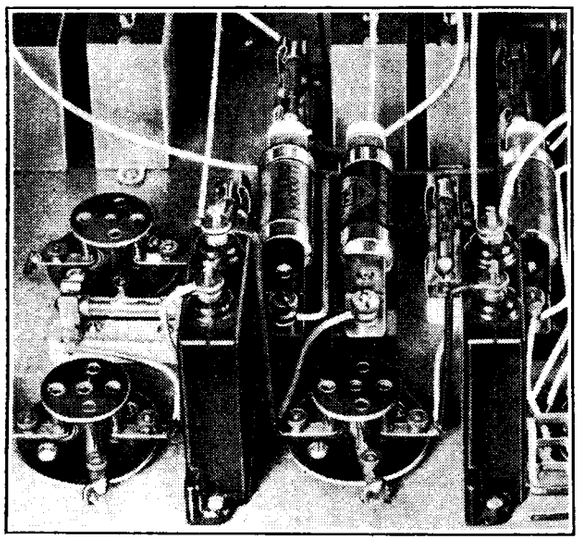

A typical high-quality amplifier of a few years ago—the coupling condensers can be seen between the valve-holders.

equation (1); we have $r = \sqrt{1-0.95^2} / 0.95 \times 6.28 \times 10^4 \times 1.5 \times 10^{-10} = 10{,}900$ ohms. The next step is to evaluate R from equation (2) and we have $R = 1.09 \times 3 \times 10^8 / 30{,}000 - 10{,}900 = 17{,}100$ ohms; R1 can now be determined from equation (3) as follows: $R1 = 2.5 \times 1.71 \times 10^9 / 2.5 \times 10^5 - 1.71 \times 10^4 = 18{,}350$ ohms. The next step is to evaluate C2 at

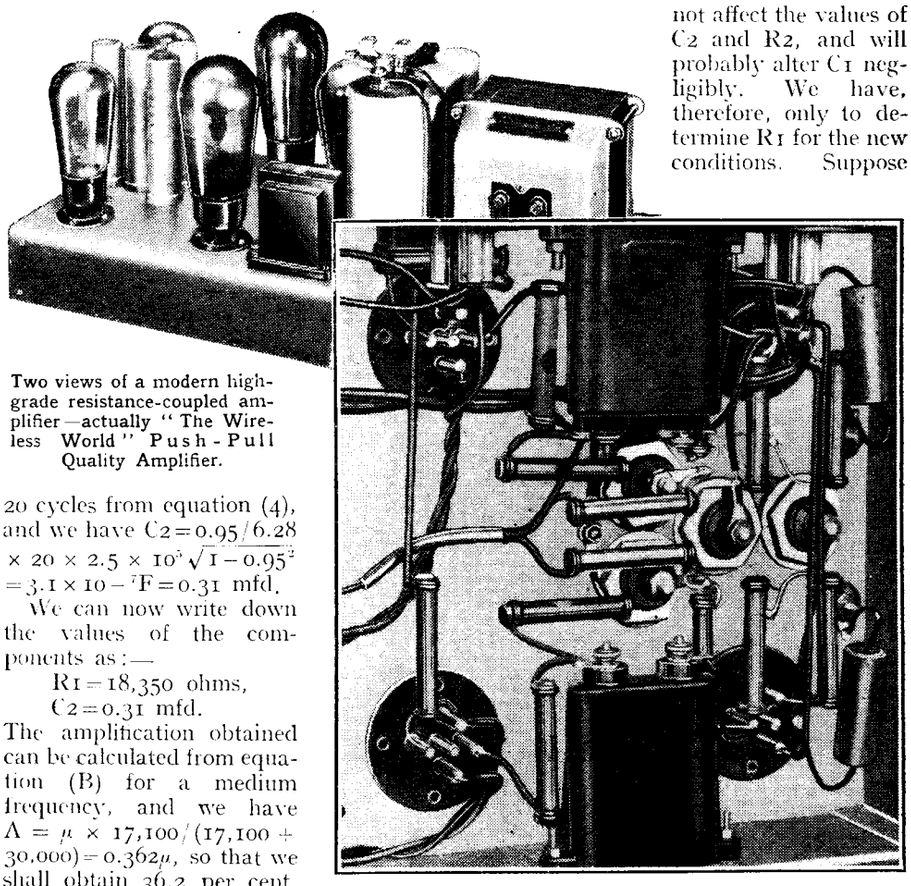

Two views of a modern high-grade resistance-coupled amplifier—actually "The Wireless World" Push-Pull Quality Amplifier.

20 cycles from equation (4), and we have $C2 = 0.95 / 6.28 \times 20 \times 2.5 \times 10^5 \sqrt{1-0.95^2} = 3.1 \times 10^{-7} F = 0.31$ mfd.

We can now write down the values of the components as:—

R1 = 18,350 ohms,
C2 = 0.31 mfd.

The amplification obtained can be calculated from equation (B) for a medium frequency, and we have $A = \mu \times 17{,}100 / (17{,}100 + 30{,}000) = 0.362\mu$, so that we shall obtain 36.2 per cent. of the amplification factor of the valve. A battery valve may have $\mu = 30$, so that the stage gain is 10.85 times; a mains valve, however, might have $\mu = 80$, and the amplification would then be 29 times.

The design of the stage is now complete, and we know that we shall find nothing to complain of as regards its frequency characteristic. The question of amplitude distortion must not be overlooked, however. The load impedance, which in this case can be considered as R (R1 and R2 in parallel), exercises a straightening effect on the valve characteristics, which increases with the value of R. It will be shown later that except when the valve is to handle exceptionally small voltages the load resistance R should not be smaller than twice the valve resistance Ra. We have, however, obtained a value of 17,100 ohms for R, and Ra is 30,000 ohms, so that our load impedance will be nearly one-half of the valve resistance. Although our stage is satisfactory as regards frequency distortion, it may fail entirely when we come to consider amplitude distortion.

A note regarding the remedy may be of interest. The correct procedure in a case of this nature is to choose a lower resistance valve. This will not affect the values of C2 and R2, and will probably alter C1 negligibly. We have, therefore, only to determine R1 for the new conditions. Suppose we choose a 10,000-ohm valve, $r = 10{,}900$ ohms as before; when we determine R we find it equal to $-121{,}500$ ohms, or a negative resistance. What has actually happened is that we have chosen a valve which is itself of low enough resistance to maintain the upper register to the required degree, and no matter how high we make R1 the high-frequency response will not fall below the limit which we have set. Formulæ (2) and (3), therefore, are of no use to us in this case for determining R1, and we can choose it solely on grounds of obtaining maximum amplification or minimum amplitude distortion. In general, the avoidance of distortion is of greater importance than the attainment of maximum amplification, and the considerations necessary for this will be dealt with in the second part of this article.

Decoupling Considerations

Before concluding this section it may be as well to remark on two aspects of the coupling which affect the bass response and which are not shown up in the formulæ. In the first place the bass response will be slightly greater than that calculated from equation (C), due to the increase in load on the valve when the reactance of C2 becomes appreciable. At middle frequencies the load consists of R1 and R2 in parallel, for the reactance of C2 is so small in comparison with the

Resistance-coupled Amplifiers—

resistance of R2 that it can be ignored. At low frequencies, however, the reactance of C2 increases and may become appreciable. The load is then R1 in parallel with the series combination of R2 and C2 and increases with frequency. This effect increases the amplification assessed by equation (C) by a factor

$$\sqrt{[R_2^2+1/\omega^2c_2^2]}/\sqrt{\left[R_2^2+1/\omega_2^2\,c_2^2\left(\frac{R1+Ra}{R1+Ra+\frac{R1\,Ra}{R2}}\right)^2\right]}$$

and will be seen to be negligible as long as R1Ra/R2 is small compared with unity.

The second effect is one which occurs when decoupling is included; the circuit then takes the form shown in Fig. 3. If the decoupling resistance R3 has a high value compared with the reactance of the condenser C3, the impedance of the load on the valve will rise at low frequencies owing to the increasing reactance of the condenser. The effect is similar to that found with the coupling components, but it can occur with greater magnitude. It can be shown mathematically that it can exactly compensate for the loss in the coupling.

In practice this is rarely of great use, for R3 is not often negligible and severely limits the possible rise in load impedance at low frequencies. The only case in which the effect may be put to definite use is where R3 has a high value and R1 a low value (under some 5,000 ohms), as in some tone-correction circuits. Unless the values be properly chosen it is then easy to obtain excessive amplification of the bass. In general, however, these effects may be ignored and the amplification calculated with sufficient accuracy from the formulæ given in this article. The loss of bass experienced in practice is then likely to be slightly less than the calculated value.

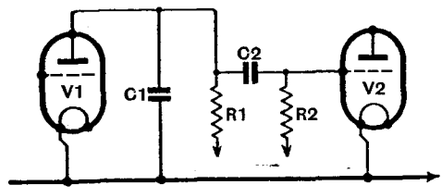

Amplification A at mean frequency (say, 400 cycles).

$$=\frac{\mu R}{R+R_a} \qquad \text{(A)}$$

At a high frequency, $A=\frac{\mu R}{R+R_a}\times\frac{1}{\sqrt{[1+\omega^2c_1^2r^2]}}$ (B)

At a low frequency, $A=\frac{\mu R}{R+R_a}\times\frac{R_2}{\sqrt{[R_2^2+1/\omega^2c_2^2]}}$ (C)

where μ = amplification factor of valve; R_a = interval A.C. resistance of valve (ohms.) — under working conditions.

$R = R_1R_2/(R_1+R_2)$
$r = R_aR/(R_a+R)$
R_1 = coupling resistance (ohms)
R_2 = grid leak (ohms)
C_1 = effective shunt capacity (farads)
C_2 = coupling capacity (farads)
ω = 3.14 times frequency
Given x = fractional response required
R_2 = grid leak
R_a = valve resistance

At high frequencies,

$$r=\frac{\sqrt{1-x^2}}{\omega c_1 x} \qquad (1)$$

$$R=\frac{rR_a}{R_a-r} \qquad (2)$$

$$R_1=\frac{RR_2}{R_2-R} \qquad (3)$$

At low frequencies,

$$C_2=\frac{x}{\omega R_2\sqrt{1-x^2}} \qquad (4)$$

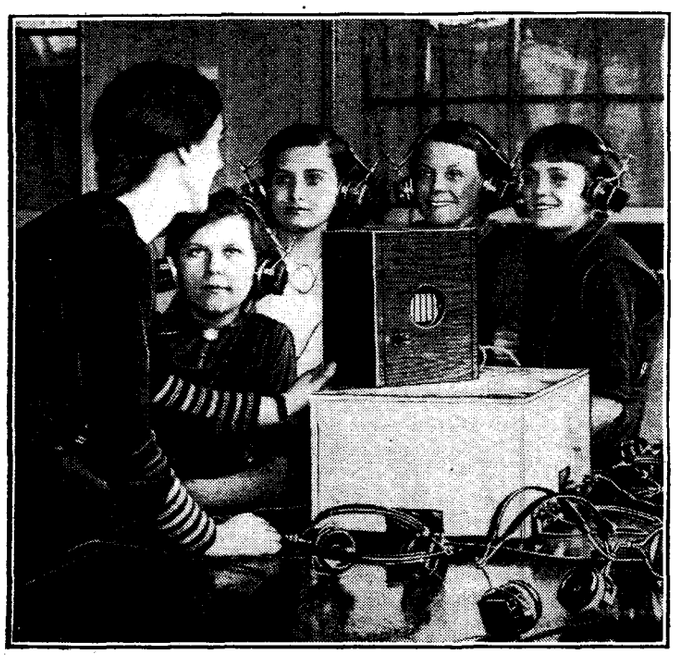

EIGHT DEAF SCHOOLS now employ amplifying equipment and moving-coil headphones adjusted to give a tonal response suited to the user's requirements. This photograph was taken at the Royal School for Deaf and Dumb Children, Old Trafford.

* * *

Moving-coil Headphones

Helping the Deaf to Hear

THE picture in *The Wireless World* of Nov. 30th, showing the use of moving-coil headphones by deaf boys in the Manchester University Department of Education of the Deaf, has aroused much interest. We are now able to give some details of the equipment and of the work carried on in the Department.

To obtain the best possible output for deaf persons the apparatus makes use of a binaural system of listening with moving-coil earphones. Before the design of these 'phones reached its final stage it was necessary to make experimental receivers involving specially small magnets. It is possible to get varying frequency responses on the moving-coil receivers, this being an advantage when the apparatus is used for subjects with different qualities of hearing loss.

Telephone receivers making use of piezo-electric crystals have also been introduced into the work, being particularly useful when great sensitivity to high frequencies is required.

The moving-coil earphones are specially made to the order of the Department, which is conducted by Dr. T. S. Littler. They are of about 5 ohms resistance and make use of a dome-shaped spun aluminium diaphragm with formerless coil. A single receiver weighs about ten ounces. Experiments are contemplated making use of the new Alni alloy with a view to lessening the weight of the earphones.

The Department of Education of the Deaf at Manchester University was founded in 1919 by the late Sir James E. Jones for the purpose of training teachers of the deaf. We understand it is the only University Department in Europe which conducts such work. In 1924, Dr. and Mrs. Ewing began a series of extensive measurements on the hearing characteristics of 500 deaf children and adults. The phenomena associated with deafness to high and low frequencies were definitely established and the results of the research introduced into methods of teaching deaf children.

The apparatus described is now in use in eight schools, at Birmingham, Brighton, Derby, Doncaster, Manchester, Margate, Sheffield and Stoke-on-Trent.

THE RADIO INDUSTRY

THE Copper Development Association, Thames House, Millbank, London, S.W.1, has sent us an interesting and extremely attractively produced booklet dealing with the technical application of brass.

This publication is in the form of an engineer's notebook, and it is proposed to issue copies, without charge, to members of engineering institutions, engineering students, and to others interested in the specification of metals.

A new catalogue describing Ostar-Ganz Universal sets and kits has just been issued by Eugen J. Forbat, 28/29, Southampton Street, Strand, London, W.C.2.

Transverse Current Microphone

Constructional Details of an Inexpensive Instrument Giving High-class Reproduction

By D. W. HEIGHTMAN

THE microphone described in this article is basically the same as that used largely for public address work, yet it is comparatively easy to build and will give very good reproduction.

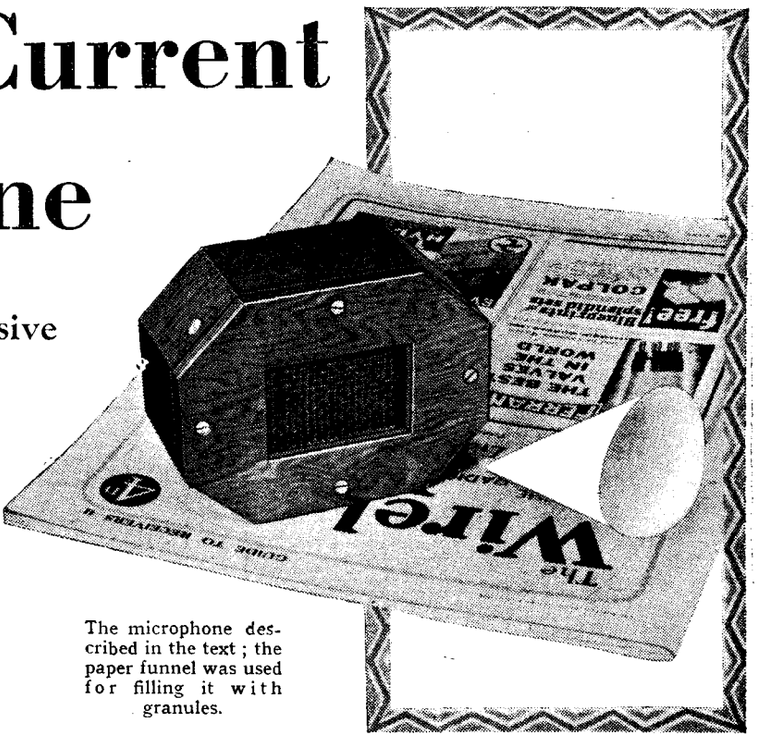

The microphone described in the text; the paper funnel was used for filling it with granules.

THERE are many interesting and often amusing experiments possible with a good microphone joined to the pick-up terminals of the broadcast set, but whenever this ruse is adopted to derive some entertainment at the expense of visiting friends the quality of reproduction must be particularly good to be convincing. High-grade microphones are comparatively expensive, yet their construction is not beyond the scope of any home constructor having a reasonably well-equipped workshop. The difficulty does not lie so much with the actual making as finding a suitable design. The microphone described here can be relied on to give very good results, and it entails the outlay of a few shillings only for the materials.

Basically the microphone is similar to that used largely for public address work as it is a transverse current type, consequently the output is not large, being of the order of 0.1 volt across the secondary of the transformer. An output comparable to that from the average gramophone pick-up can be obtained by bringing the microphone fairly close to the speaker so that adequate volume for normal home requirements is possible with the LF amplifying portion of a broadcast receiver.

Good Response

Microphones of the transverse current type, if reasonably well designed, have a very good frequency response and are generally free from objectionable resonances, so the model must not be regarded as a toy and can justifiably be classified as a high-grade instrument suitable in every respect for serious experimental work and for amateur transmitter use.

The body of the microphone consists of a block of hard wood such as teak, mahogany, or any close-grained wood free from resin, and preferably cut to the shape shown in the accompanying sketch. Care should be taken to plane the top face smooth and flat. Two slots are now cut in the planed face each $\frac{1}{2}$in. deep and $\frac{1}{2}$in. wide and 2in. long. The simplest way is to drill a number of $\frac{1}{2}$in. diameter holes along the space marked out for the grooves and remove the intervening wood with a sharp chisel. These grooves are spaced $2\frac{1}{4}$in. apart, measuring from the inside edges.

A shallow trough must now be made between the two grooves for the carbon granules, and this could be formed by chiselling out the wood to a depth of $\frac{1}{16}$in. and $1\frac{1}{2}$in. wide. But a simpler method is to remove one layer from a piece of $\frac{5}{16}$in. five-ply wood cut slightly larger than the main wooden block and with a sharp pen-knife cut out the centre to the dimensions given. This is then glued to the block with the long side grooves exactly coinciding with those below. When it has set hard the sides can then be filed or planed down to conform with the shape of the hard-wood block. In the meantime, attention can be given to the preparation of the remaining parts. One further spacing piece is wanted also cut from one layer of ply-wood as before. In its centre is a rectangular slot $2\frac{1}{8}$in. long and $1\frac{3}{8}$in. wide. This is shaped to conform with the hard wood block and can be put aside for the time being. Its purpose is that of a spacer between the thin mica diaphragm and the protecting wire gauze.

The front cover can now be prepared; this is cut from $\frac{5}{16}$in. five-ply wood and in its centre is a $2\frac{1}{8}$in. × $1\frac{3}{8}$in. rectangular slot. A narrow channel is cut out from the back of the cover plate to accommodate the gauze, so that when the whole is assembled the edges of the microphone present a smooth surface. This should be slightly larger than the centre aperture and formed by removing the first layer of ply for $\frac{3}{16}$in. round the edge of the aperture. A piece of fine mesh copper wire gauze is now cut just large enough to fit the space. These three pieces are marked E, F and G respectively in the drawing.

The hard-wood block and its glued-on piece should now be ready for handling, and the next process is to drill two $\frac{1}{4}$in. holes in the chamfered side through to the two deep grooves in the block. Later these will be used to fill the microphone with granules.

Order of Assembly

Two rods of pure carbon $\frac{1}{4}$in. or preferably $\frac{5}{16}$in. in diameter cut $1\frac{1}{4}$in. long are now prepared to fit into the side channels. These can be obtained from old torch batteries, and the best way to remove them is to first separate the cells, chip out the pitch, then grip the brass cap on top of the centre carbon tightly with a pair of pliers, twist once or twice, when the whole rod will slide out easily. When cut to size the top and bottom surfaces of the rods should have a flat filed along the full length. A hole to clear 6BA screwed rod is then drilled midway in each and one to correspond passed through the wood block from the side channels as shown in the drawings. These form the two terminals of the microphone.

Before attempting the final assembly the several pieces of wood spacers are fitted together and four holes drilled to pass $\frac{5}{8}$in. No. 4 countersunk brass wood-screws. The clearance holes are carried down only through the outer cover and spacing piece. Brass screws are inclined to shear if screwed into hard wood without first drilling a small diameter hole, so when the four holes already mentioned have been drilled

Transverse Current Microphone—

and their positions marked on the underneath block they should be continued for a distance, using a drill one size or so smaller.

A trial assembly can now be made so that the sides of the several pieces of wood may be trued up and sandpapered flush. A coat of varnish might even be applied to impart a presentable appearance.

When this has dried hard dissemble the front, remove the loose spacing piece, and the final assembly can be commenced.

First fit the carbon rods in position by cutting off two pieces of 6BA screwed brass rod sufficiently long to project about ½in. from the back of the wood block and $\frac{1}{16}$in. above the top of the carbon rods. The carbon rods are then fixed in position by running 6BA nuts on each end of the brass rods and tightening. Care must be taken to see that the nuts are tight enough to hold the rods firmly in position but not so tight that it fractures them.

The diaphragm, which must be of clear ruby mica 2¼in. long by 3½in. and 0.001in. thick, is then glued in position, it must cover the centre trough and the two side channels and be securely fixed down all round. Seccotine, slightly warmed to make it flow easily by immersing the tube in warm water, is then thinly smeared on the face of the main block and the mica diaphragm placed carefully in position. Handle this very delicately as it is extremely fragile. An alternative to Seccotine that is suitable for this purpose is Rawlplug Durofix. As the diaphragms are not expensive several should be purchased in case of accidents. They cost 6d. a half-dozen and are obtainable from the British Mica Co., Ltd., Bedford. It is essential that the mica diaphragm be perfectly flat and not sag in the centre.

When the glue is hard the wood spacer may be placed carefully in position, the gauze grille fitted into the back of the front cover and the four wood screws replaced and tightened.

Filling

The next and final procedure is to pour in the carbon granules. These are very fine indeed, being more like carbon dust, and they are described as the No. 6 Quality T.G.1625N carbon granules, and obtainable from the Morgan Crucible Co., Ltd., Battersea Works, Church Road, London, S.W.11. They cost 5s. 6d. an oz. plus postage. If constructed according to the specification given the microphone will hold just about ½ oz. of granules. They are poured in through the two holes A and B in the chamfered sides already mentioned, using a funnel fashioned from stout paper. As the granules are poured in the microphone is tilted and tapped gently to ensure that they find their way into the centre space. Fill to within about ⅛in. of the top and see that the granules are perfectly dry before filling by keeping the bottle corked until required, as damp granules will pack and spoil the performance of the microphone. When the filling is complete plug the two holes with corks cut to shape and size with a razor blade.

This microphone needs between 6 and 8 volts for excitation and passes about 30 mA. It has an impedance of the order of 300 ohms and requires a transformer with a ratio of about 1 to 30.

Materials Required

- 1 block of hard wood 4½in. × 3½in. × 1in. to 1¾in. thick.
- 1 piece of $\frac{5}{16}$in. 5-ply wood 12in. × 4in.
- 1 length of 6BA rod, 6in. long.
- 4 6BA locking nuts.
- 2 6BA terminal heads.
- 1 Mica diaphragm 3½in × 2¼in. × 0.001in. thick.
- 1 piece of copper or zinc gauze fine mesh 3in. × 2½in.
- 2 small corks.
- ½ oz. No. 6 quality T.G.1625N carbon granules.
- 4 ⅝in. No. 4 brass wood screws countersunk heads.

SCALE DRAWINGS OF THE MICROPHONE PARTS

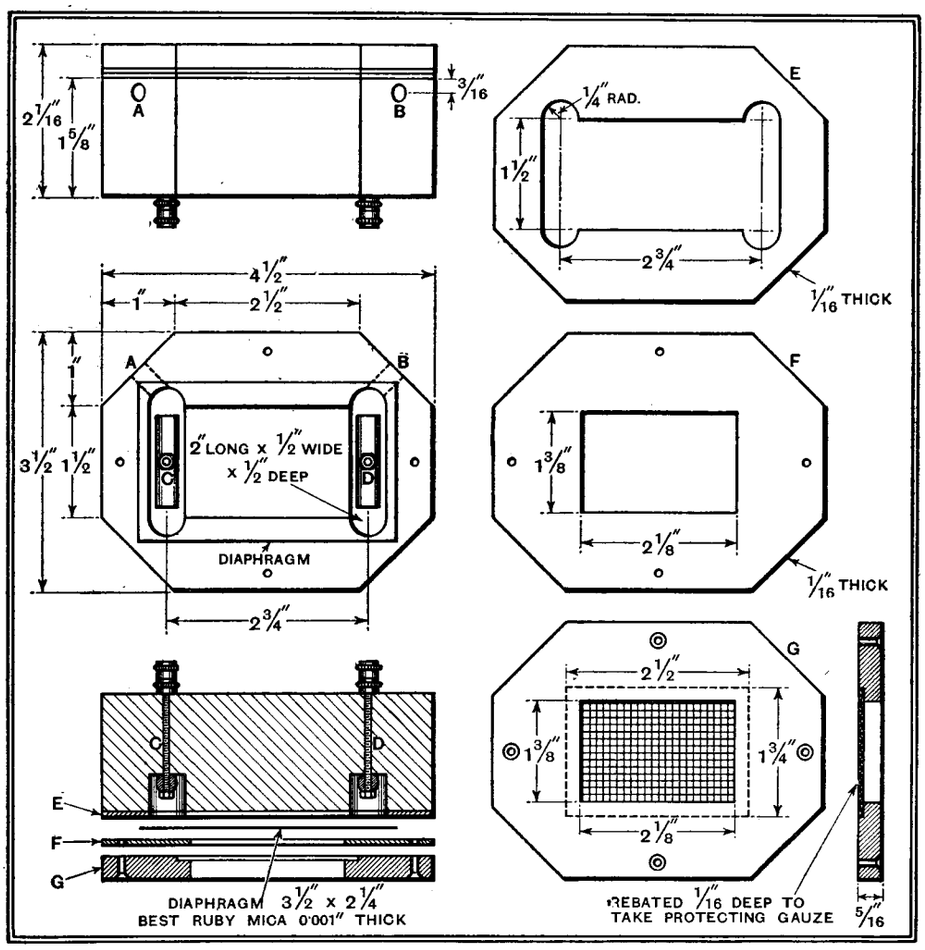

Dimensional drawing of the various parts required for the construction of the microphone; the order of assembly is shown in the left-hand bottom corner. Holes A and B in the top left-hand elevation view are for filling the microphone with granules.

MODERN BATTERY MANUFACTURE

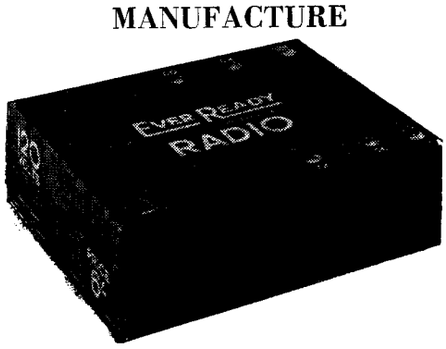

EIGHTY complete dry-cell units, eighty-six connections, one hundred and seventy-two soldered joints, to say nothing of insulating separators, a container, sockets, etc. We have not checked all the figures, but that is roughly what one gets for 6s. in the new Ever Ready "Radio" 120-volt battery, which represents a triumph of modern manufacturing technique.

Reference to our files of ten years ago shows that Ever Ready batteries of the same voltage then cost 26s., and it is safe to say that the cells are now better in every respect.

Prices of other batteries in the "Radio" series are 3s. 6d. for 66 volts and 5s. for 100 volts.

Current Topics

EVENTS OF THE WEEK IN BRIEF REVIEW

X-Stoppers on Trolley 'Buses

FOLLOWING representations by the Wireless Retailers' Association, the London Passenger Transport Board has agreed to fit anti-interference choke coils to trolley 'buses running on new routes to be opened up in many parts of North, South, and East London.

D.F. for Air Liners

ADDITIONAL wireless guidance for Imperial Airways aircraft on the African and Indian air routes will be afforded by the new Marconi-Adcock D.F. equipment which is to be installed at the Mersa Matruh Aerodrome, near Alexandria, by order of the Egyptian Ministry of Communications. The equipment should be of special use to aircraft for the Mediterranean crossing and for the Northern stage of the flight across Africa.

The Physics of Radio

DR. D. OWEN is to give a course of ten lectures on Tuesday evenings from 7 to 8.30, beginning on January 15th, at the Sir John Cass Technical Institute. He will deal with the physics underlying recent developments in our knowledge of electrical oscillations and wave propagation.

The course should appeal to amateurs and practical experts interested in the electrical basis of wireless.

Institute of Radio Servicing

ON Wednesday, January 2nd, a meeting of radio service engineers was held in London. The meeting was called by Mr. J. N. de Gruchy, and some 150 persons attended. Mr. W. McLanachan, a well-known service engineer, was in the chair. The decision to form an association was almost unanimous, but the title has not yet been agreed upon. The chairman expressed the view that some form of examination as to qualifications for membership would be necessary, and that part of the work of the association should be to assist in training. An employment bureau is to be one of the first activities of the association.

A general meeting is to be held on February 6th, and any service engineers who are engaged in the industry can obtain further information on application, with postage for reply, to Mr. J. N. de Gruchy at 48, High Street, London, N.2.

The Saar Plebiscite

RADIO is playing a significant part in the Saar Plebiscite. There are four high-power broadcasting stations in the vicinity, namely, Luxembourg, Strasbourg, Stuttgart-Mühlacker and Frankfurt. The first two have kept clear of the conflict, but, according to a correspondent, the Stuttgart and Frankfurt programmes contain much propaganda.

The High-power Cult

THE modern broadcasting station appears to require at least 100 kilowatts, and from all parts of the world come reports of the construction or projected construction of such transmitters. Bulgaria will shortly have a 100-kilowatt station at Sofia, while Czechoslovakia will have a transmitter of similar power to replace the Kosice station which is at present operating on 2.6 kilowatts.

Japan proposes to erect a 150-kilowatt station at Tokio with studios in the city and also at Osaka.

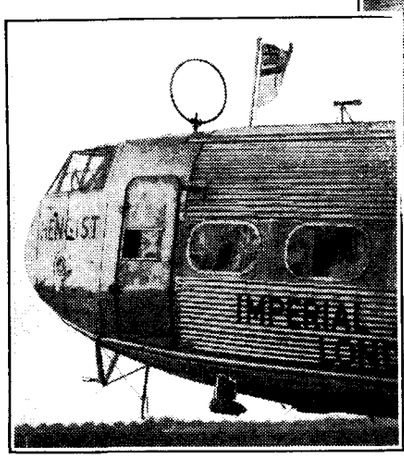

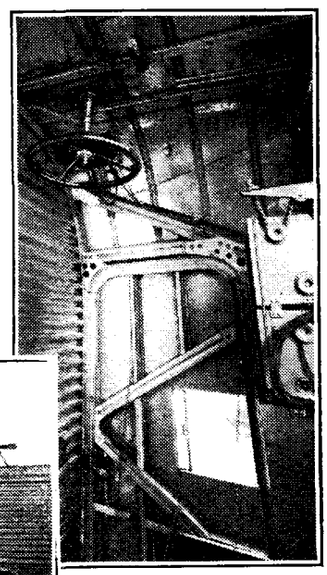

THE NEW HOMING Two pictures of the Imperial Airways machine "Hengist" which has been fitted with a new form of the familiar Marconi "homing" device. This not only gives warning when the aircraft is off course but registers the number of degrees of error.

"Heil Hitler"

ALL German stations now close down with the National formula, "Heil Hitler." The entrance doors of Broadcasting House in Berlin are placarded with notices instructing visitors that they are to use "Heil Hitler" as their form of greeting. According to our Berlin correspondent, foreign residents in Germany are often in a quandary as to how to reply. Some answer "Heil" without the "Hitler," others stick to "Good-day," and those blessed with a sense of humour adapt the German greeting to their own nationality and answer "Heil Roosevelt," etc.

British Radio in Greece

MARCONI'S Wireless Telegraph Co., Ltd., of London, has secured the exclusive right for the installation and exploitation of broadcasting stations throughout Greece for twenty-five years. The majority of shares in the company operating the broadcasting system will be held by Greek subjects.

All-night Radio Party

BETWEEN 11.45 p.m. on January 19th and 6 a.m. on the 20th the West Middlesex branch of the Anglo-American Radio and Television Society will hold an all-night party. Guests will hear America and have an opportunity of testing their skill at the dials. Mr. Leslie W. Orton, the President, will demonstrate how to tune in a 100- and 500-watt American station, and ask visitors to do the same.

Admission to the party is free, and those wishing to attend should apply for particulars to Mr. Leslie W. Orton, "Kingsthorpe," Willowbank, Uxbridge, Middlesex.

Catheon, Ltd.

WE understand that a new company is to be registered under the name of Catheon, Ltd., the directors of which will be Messrs. T. A. W. Robinson, R. Milward Ellis, and C. O. Stanley. The company will be concerned with television developments.

Radio Advertising in France

THE growing similarity between the French and British broadcasting organisations became more marked on January 1st. From that date all advertising from the State-controlled stations of Radio-Paris, Paris PTT, and Eiffel Tower was banned.

Slow Morse

SLOW Morse test transmissions under the auspices of the Radio Society of Great Britain will be carried out on Sunday next, January 13th, as follows: —

G.M.T.	kcs.	Station
0030	1820	G2OI (Manchester)
0930	1828.3	G2II (Colwyn Bay)
1000	1815	G2DQ (Wickford, Essex)
1030	1911	G2JL (Newport, Mon.)
1100	1.7 mc.	G2UV (Wembley, Mddx.)

Reports will be appreciated by the R.S.G.B.

Wireless Signals Reunion

THE second Annual Reunion Dinner of Wireless Signals R.E. is to be held in Birmingham on Saturday, February 2nd, next. At the first Reunion Dinner held last year ninety officers and other ranks were present, but it is hoped that a still larger attendance will be obtained in February.

Full particulars can be obtained on application to the Hon. Secretary, Mr. C. Johnson, 288, St. Paul's Road, Smethwick, Staffs.

The Voice that Cheers

A CAMPAIGN against the broadcasting of "stupid songs concerning broken hearts, broken vows, tears, and sadness" has been started by M. Georges Barbarin in our French contemporary, the *Haut Parleur*. The time has come, according to this writer, to spread confidence and optimism, and he suggests daily talks from the State stations by an encouraging feminine voice giving counsels of optimism and fortitude.

The Bulb of Many Uses

Utilising the Electric Beam

THE preceding instalment dealt with the basic principles and construction of the cathode ray tube. We now pass on to a description of methods whereby movements of the beam may be controlled in such a way that transient electrical phenomena are made visible.

Continued from page 5 of last week's issue

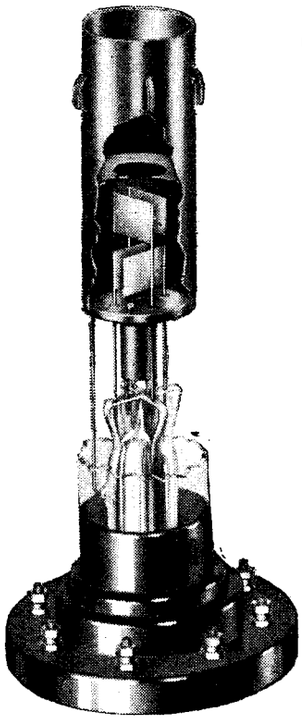

A cut-away illustration showing the mounting of two pairs of deflecting plates inside the tube.

By courtesy of A. C. Cossor Ltd.

HAVING found a way of producing our electron beam we must now consider the means of using it as an indicating device. The beam is usually controlled by the well-known deflecting plate system, of which the construction can be seen in the "ghost" photograph attached and their operation in Fig. 3. One pair of plates (VP of Fig. 3) permits the beam to be deflected up and down, while the other pair (HP) permits it to be moved horizontally.

In skeleton diagrams these plates are usually illustrated as shown in Fig. 4, which gives the impression of the two pairs, one moving the spot vertically and the other horizontally. The central dot in Fig. 4 can be regarded as representing the electron beam or it can be regarded as representing the anode from which the beam emerges. It is essential to have a conducting path between each deflecting plate and the anode, otherwise charges build up on the plates and spuriously deflect the spot. It is now common practice to bring all four deflecting plates out to separate terminals, and this matter of ensuring a conducting path from each plate to the anode must therefore be borne in mind.

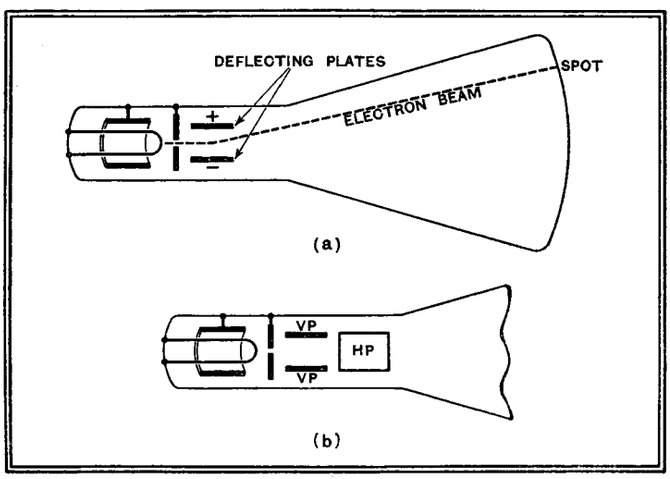

Fig. 3.—Deflection of electron beam by plates within the tube : (a) one pair of plates deflecting beam vertically ; (b) two pairs of plates, VP for vertical deflection, and HP for horizontal deflection.

Several different ways of doing this and of connecting the plates to external circuits are shown in Fig. 5. For example, Fig. 5 (a) shows one of the simplest types of connection. In normal operation the anode of the tube is earthed, and this circuit shows *one plate of each pair* directly connected to it, while the other is joined to an output circuit. This assumes, of course, that this circuit has one side earthed or earthy. If it has not, but has or can have a centre earth, then the scheme of Fig. 5 (b) is applicable, this amounting to push-pull connection. If the output cannot have a centre earth directly connected, the equivalent can usually be obtained by means of a high resistance across it, centre earthed. The respective uses of these two methods are dictated entirely by the type of output circuit to which the tube is to be joined. Fig. 5 (c) illustrates a very useful case in which the tube is applied to examine, say, the AC component in a circuit which also carries DC. Since the tube responds alike to AC and DC it will be seen that the DC component will have the effect of pushing the spot to a new position on the screen (or off it if the DC is large). The DC can be eliminated, but the AC passed on to the tube by the resistance-capacity coupling system shown in Fig. 5 (c), again assuming an output circuit with one side earthy. If this is not the case the double condenser system of Fig. 5 (d) can be used, being again the equivalent of a (resistance-capacity) push-pull circuit. In all the cases of Fig. 5 only one pair of deflecting plates has been shown completely connected in order to simplify things, but it will be realised that exactly similar reasoning is applied to the other pair according to the actual type of circuit with which it is used.

It will be seen that all the arrangements shown fulfil the condition of having a conducting path from each plate to anode, but it should be mentioned that this path can be quite a high resistance. For example, in Fig. 5 (c) and (d) the resistance across the plates can be 1 or 2 megohms, with condensers up to 1 mfd., according to the frequency to be passed. It will also be seen that the push-pull connections of Fig. 5 (b) and (d) could be applied to *one pair* of plates, while the "one-side-earthed" connections could be applied to the other pair if this is most convenient in the conditions of use.

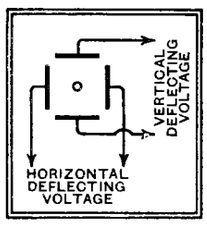

Fig. 4.—Skeleton circuit of deflecting system.

Besides deflection by the plates inside the tube the beam can also be deflected by means of the magnetic field of a coil or coils *outside the tube*. This is possible because the beam, being composed of moving electrons, is the equivalent of a current-carrying wire, but without inertia, and can therefore be influenced by a magnetic field in just the same way as the coil in our moving-coil instruments. The

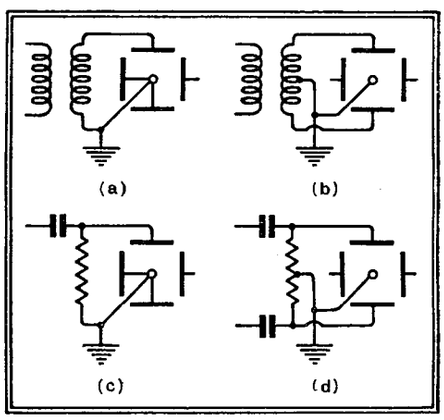

Fig. 5.—Different methods of joining up the deflecting plates.

The Bulb of Many Uses—

use of a feeble permanent-magnet is, indeed, a well-known means of moving the spot about to any desired position on the screen. For deflection by means of current-carrying coils it is usual to employ two coils in series for each dimension of deflection, one pair for a single dimension of deflection being shown diagrammatically in Fig. 6.

An important distinction to remember, however, in the case of coil deflection is that the beam is deflected at right angles to the magnetic field. Thus, in Fig. 6 the magnetic field is applied vertically and the spot moves horizontally. For most practical purposes electric deflections by the plates is the more useful, but there still exist cases where ability to use magnetic coil-deflection is very valuable.

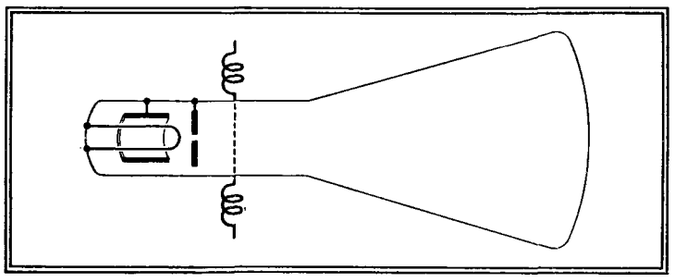

Fig. 6.—Deflection of electron beam by current-carrying coils outside the tube.

The previous article referred to the use of a time base, and it will be remembered, from the list of applications given above, that many of these reduce to the measurement of some quantity against time.

In practice, therefore, the use of a time base voltage becomes the simple one of making the spot move, say, from left to right in some known period of time, and

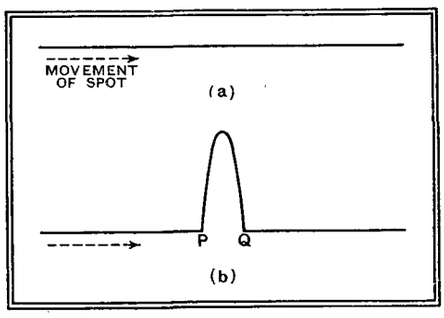

Fig. 7.—Illustrating the use of a time base.

observing the phenomena that occur during that time. For example, in Fig. 7, if the spot is moved from left to right its transit will be represented by the line shown in (a). If, at some point, P in this transit, the spot suddenly receives a deflection in the vertical direction, then, since it is capable of moving in both directions, it will do so, returning to its "zero" line at the end of the impulse and completing its time stroke from Q onwards, as shown in (b). If the whole process is sufficiently slow to be followed by the eye this can, of course, be seen, but in practice it is much more usual to want the cathode ray tube for speeds that the eye cannot ordinarily follow. Suppose, for example, that the process of Fig. 7 is repeated, say, 50 times a second, and that the vertical kink always lands in the same place along the time stroke. The result on the fluorescent screen will then be a steady picture (Fig. 7 (b)), of the wave form of the transient phenomenon.

An excellent time base circuit was illustrated in the previous article, but before dealing further with practical circuits for obtaining a time-base, it will be well to consider the types of voltage that we can apply to the horizontal deflection plates for the purpose. From what has been said above it will be realised that the voltage used should be a repeated or recurrent one, and a voltage conforming to this description is available (in most places where the cathode ray tube is likely to be used) in the form of the 50-cycle mains.

Sine-wave and Saw-tooth Voltages

The wave-form of an ordinary alternating voltage is of the sinusoidal form shown in Fig. 8 (a). But there is another kind of wave-form that we can have for use with the cathode-ray tube and which will be increasingly referred to in connection with the application of the tube to television. It is one which, if applied to the plates of the tube, causes the spot to move slowly and uniformly, say, from left to right with an abrupt return from right to left which lasts only a small fraction of the time taken to travel from left to right. If we plot such a voltage against time the wave-form is of the type shown in Fig. 8 (b), and it is usually described (from its shape) as a "saw-tooth" voltage.

The essential difference in the behaviour of a sinusoidal and a saw-tooth voltage when used as a time base for a cathode-ray tube is shown in Fig. 9. In the upper picture (a) we have a sinusoidal voltage of 50 cycles applied to the horizontal plates and one of ten times this frequency, that is, 500 cycles, applied to the vertical.

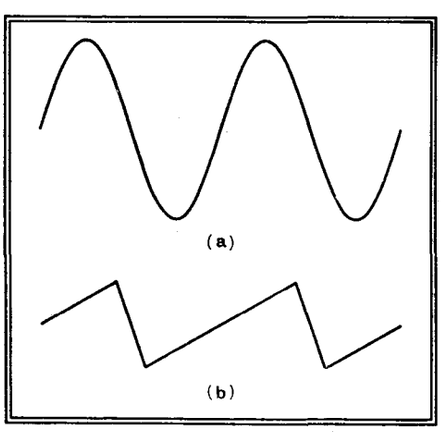

Fig. 8.—Variation of sinusoidal voltage (a) and of saw-tooth voltage (b).

Thus, in moving back and forward *once* the spot moves up and down *ten times*, but on its backward journey retraces the same path as in its forward journey, so that only five cycles are visible. Moreover, the cycles do not appear to be of equal length because the spot is not moving uniformly back and forward, but is moving more rapidly during the middle part of its stroke than at the end. On the other hand, Fig. 9 (b) shows a saw-tooth time base of the same frequency and the 500 cycles again applied vertically. In this case, since the spot is moving uniformly from left to right, all the cycles of the 500 cycle voltage now appear of equal length, and all ten are shown, except for the very small part of one cycle which is lost in the abrupt return journey from right to left.

From this it will be apparent that a saw-tooth source is much preferable for time base purposes. Despite this, however, a very great deal of use can be made of the 50-cycle mains in many wave-form appli-

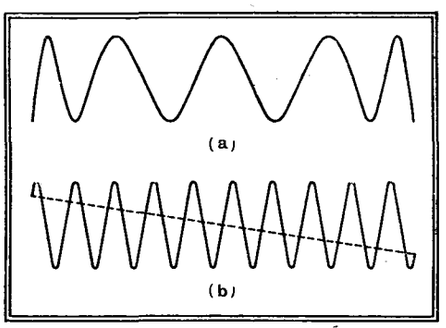

Fig. 9.—Difference of wave-forms shown on a sinusoidal (a) and saw-tooth (b) time base.

cations, and the beginner who desires to incur the minimum of expense in his first set-up will be well advised to start off with this simple time base, since it costs so little. There is only one point of care to be noted, that is, that it is always desirable to have a transformer between the mains and the deflecting plates. One side of the mains is normally earthed and there is a liability to get this mixed with the earthy side of the deflector plates, with disastrous results. Additionally, with low tube voltages the mains will usually deflect the spot too much. Both difficulties can be obviated by using a small transformer between the mains and the horizontal plates. This can be 1/1 or actually step-down, and need only be very small in size since the load is negligibly small. An output transformer or a suitable intervalve transformer, working backwards as a step-down, is quite suitable, according to the deflection desired.

Elliptical Time Base

Even with a sinusoidal time base, although the whole horizontal stroke is not uniform, the middle portion of it is practically so and can be used for accurate time measurements. This can be seen in Fig. 9 (a). The difficulty of the spot traversing the same path backwards (referred to in connection with Fig. 9 (a)) can be avoided in a very simple way. This is, in fact, not to let it travel the same

The Bulb of Many Uses—

path backwards, but to make the time base move elliptically as shown in the dotted ellipse of Fig. 10 (a). The circuit for producing an elliptical time base is shown diagrammatically in Fig. 10 (b).

The principle of the method is that if we apply an alternating voltage to a capacity and resistance in series the voltage-drops across the condenser and across the resistance differ in phase by 90°. If the resistance is exactly equal to the impedance of the condenser they are of equal value but differ in phase by the amount stated; if the resistance is less than the impedance of the condenser the voltage across the resistance is less in value, but the phase difference remains as stated. This is simple AC theory. Thus in Fig. 10 (b) if the condenser C is 0.1 mfd. it will have an impedance of just over 30,000 ohms for 50 cycles. If the variable resistance R2 has a value up to 30,000 ohms the drop across C and across R2 can be made anything up to equal value, with a constant 90° phase difference. If the plates of the tube be connected as shown the presence of the phase-difference sends the spot round in an ellipse as shown dotted in Fig. 10 (a), which can be widened up to a circle when R2 = 30,000 ohms. For time base purposes a 2/1 ellipse (as shown), or even narrower, is quite suitable, and R2 is adjusted accordingly. R1 simply serves as a control of the *whole size* of the ellipse, and its value should be low compared with the 40,000 ohms or so of the series condenser and resistance. The transformer between R1 and the mains is absolutely essential, on account of the earth midway between C and R2, and it should be big enough to deliver the requisite maximum voltage across R1 with a resistance of about 5,000 ohms. It will be seen that the 50-cycle frequency uses only one plate of the vertical pair, and the 500-cycle frequency (or other source under examination) is joined between the other plate and the earthy anode. Switching on the 500-cycle source then gives a pattern such as that illustrated in Fig. 10 (a). This should be compared with Fig. 9 (a). It will be seen that in both the middle of the time base strokes are very uniform and quite useful for time measurements or waveform examination, while Fig. 10 (a) shows the back and forward journeys separately, so that if the voltage under test differs on these journeys the differences are clearly shown.

The cases given illustrate not very high ratios (only 10 to 1) between the frequency of the time base and that of the voltage which is being examined on the vertical plates. The amount of opening-up of the waveform depends, of course, on the frequency applied to the vertical plates. If this is at all high, a moderate length of 50-cycle horizontal time base deflection gives insufficient opening. This difficulty can be overcome by using a much larger 50-cycle voltage, so that the ends of the horizontal line or ellipse (which are in any case of little use) are right off the screen. The middle portion of the sinusoidal time base will then be spread out and the vertical deflections well opened. Valuable information can often be obtained by such a simple time base, and the beginner would be well advised to acquire experience with the tube working on this inexpensive time-base source before launching out with more costly equipment. But the precaution of a transformer between tube and mains is most important.

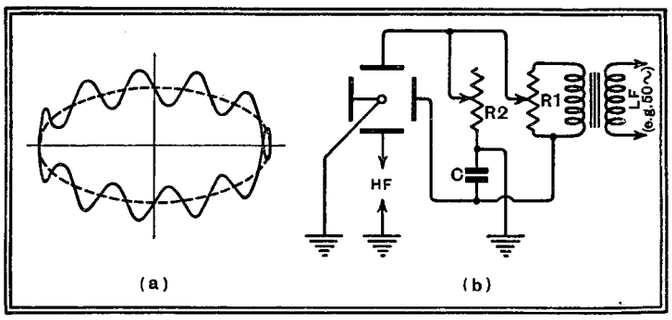

Fig. 10.—Sinusoidal voltage shown on an elliptical time base, and (b) circuits for obtaining this base.

(To be concluded.)

CLUB NEWS

The Ideal Short-wave Converter

The requirements of the ideal short-wave converter were described by Mr. E. Harper, M.I.E.E., M.I.R.E., in a lecture at the recent Annual General Meeting of the Croydon Wireless and Physical Society. Mr. Harper, who dealt specially with the converter manufactured by the Harken Electrical Co., Ltd., said that the ideal instrument enabled the unskilled listener to tune in short-wave stations with the same facility as the medium and long-wave transmitters, utilising the whole of the amplification obtainable on the listener's own receiver without the heterodyne howls and squeals inherent in the orthodox autodyne method of reception.

The Hon. Secretary is Mr. H. T. P. Gee, 51-52, Chancery Lane, London, W.C.2.

Practical Television Tests

The North Middlesex Radio Society is inaugurating a programme of practical television experiments for the benefit of its members. A simple disc receiver is in course of construction, and an ambitious programme is in preparation. Visitors are welcomed at the Society's meetings, which are held in the Lower Clubroom, St. Paul's Institute, Station Road, Winchmore Hill, N.21. The Hon. Secretary is Mr. J. G. Turner, 3, The Ridgeway, Southgate, N.14.

Television Demonstration

Thirty members of the Thames Valley Amateur Radio and Television Society recently enjoyed a talk on "Quartz Crystals" given by Mr. E. A. Dedman (G2NH), of the Quartz Crystal Co. At the last meeting, on Wednesday, January 9th, cathode ray television was the subject of a lecture. Visitors are welcomed at the Society's meetings. Hon. Secretary, Mr. J. N. Roe (G2VV), 27, Baronsfield Road, St. Margaret's-on-Thames, Middlesex.

Piezo-electric Speakers

Piezo-electric reproduction was dealt with in an interesting lecture by Mr. Menage, of Messrs. R. A. Rothermel, Ltd., at a recent meeting of the Golders Green and Hendon Radio and Scientific Society. The various types of piezo-electric speakers were demonstrated, including a new compact "tweeter" designed to provide a frequency response from 3,000 to 12,000 cycles. All enquiries should be addressed to 25, Llanvannor Road, N.W.2.

All About Everything

An emergency gap caused by the absence through illness of the President, Mr. H. R. Rivers-Moore, who was to have lectured at a recent meeting of the Croydon Radio Society, was filled by an animated discussion among the members. Subjects discussed included the correct conditions for operating valves, the advantages or otherwise of band-pass tuning, automatic grid bias, electrolytic condensers, and loud speakers. Hon. Secretary: Mr. E. L. Cumbers, 14, Campden Road, South Croydon.

A QUALITY TRANSMITTER. G2QH, owned and operated by Mr. C. Hewins, Grimsby, Lincs. On the extreme right is the speech amplifier and 100 per cent. modulator and power equipment. Behind the Reisz "mike" is the crystal-controlled transmitter. The short-wave receiver is on the left.

A Radio Bogy

Mysterious Causes of Fluctuating Signals and Interference

By F. G. G. DAVEY, M.A.

THE reasons for certain defects in broadcast reception are so obscure that the unfortunate sufferer may almost be forgiven for thinking that some malign influence must be at work. This article will suggest possible lines of investigation in such cases.

RADIO is a science, and so it follows that there must be a clear scientific explanation for even the most puzzling effects that are met with in handling a broadcast receiver. But the science is still a young one, and although our knowledge grows daily, there is even now some difficulty in finding a technically acceptable explanation for some of the defects to which wireless apparatus is liable.

A brief description of an actual experience will help to illustrate the kind of fault that is responsible for so much bewilderment even among those of experience. The set in use was a normal battery portable standing on a table by the fireside, and the defect manifested itself by sudden fluctuations of strength and an accompaniment of cracklings and rustlings while receiving the local station. The receiver behaved splendidly when taken to a neighbour's house, but any other portable set showed the same symptoms when working in the same room, especially when mounted near the fireplace. The cracklings—but hardly the signal variations—might have been ascribed to electrical interference, but this was ruled out, as there was no mains wiring or electrical apparatus anywhere in the vicinity.

Not Supernatural Causes

Now this is quite a good example of a form of trouble which, though in less acute form, is fairly prevalent. Sometimes, but not invariably, sudden changes in the strength of reproduction will be accompanied by background noises as in the present case, but it will always be noticeable that these noises cease completely as soon as the receiver is tuned to a wavelength on which no transmission is coming through.

The causes of this disconcerting behaviour generally fall into two groups:—

(1) Genuine fluctuations of received signal strength due to local causes. The most common of these are metal pipes in the house (plumbing, gas pipes, etc.) which have currents induced in them by the radio waves. The reradiation from these adds to, or subtracts from, the normal field-strength in the neighbourhood. The changes in strength may be caused by intermittent contact between various pipes, which alters the conditions for reradiation. This type of interference will, therefore, affect every kind of set within its effective range, and especially portables with frame aerials.

(2) Variations in the high-frequency resistance of the earth system of the set, due to similar causes. This would, in general, affect only sets using an aerial and earth.

These two forms of trouble are seldom quite distinct; every type of combination of the two can present itself. It should be remembered that the effective resistance of an earth (or aerial) wire to currents of any given frequency can be profoundly affected by the nature of nearby conductors and the currents induced in them. For instance, the effect of a closed loop of wire round an inductance coil is well known: consider, then, the effect of a loop of water pipes round a room containing a frame aerial, when this loop is intermittently opened and closed. A typical case is shown in an accompanying sketch.

Now the basic cure of the trouble is obviously to stop the cause of the fluctuation—if you can.

Sometimes it is easy. In one case it was found that standing on a certain board in the room containing the set caused the field strength of one of the local stations to drop to about half its normal value. The board was lifted, revealing a gas pipe crossed by an electric mains conduit. One or other of these pipes was roughly tuned to the local station, but the conditions were altered when the two pipes made contact with each other where they crossed. In this case a piece of wood was wedged between them and the mysterious interference ceased for good. They might equally well have been electrically bonded. Either course would have prevented the fluctuations.

Blame the Plumber

In another case a mains-driven set was installed with an indoor aerial and a main water pipe as earth. The programme was found to vary wildly in strength, to an accompaniment of rustlings and jarring noises. So the route of the water pipe on its way to earth was inspected. It was found to run into a main vertical conduit which ran straight up and down the whole building (a tall block of flats). In this conduit were all the supply pipes for water, gas and electricity, and also a pair

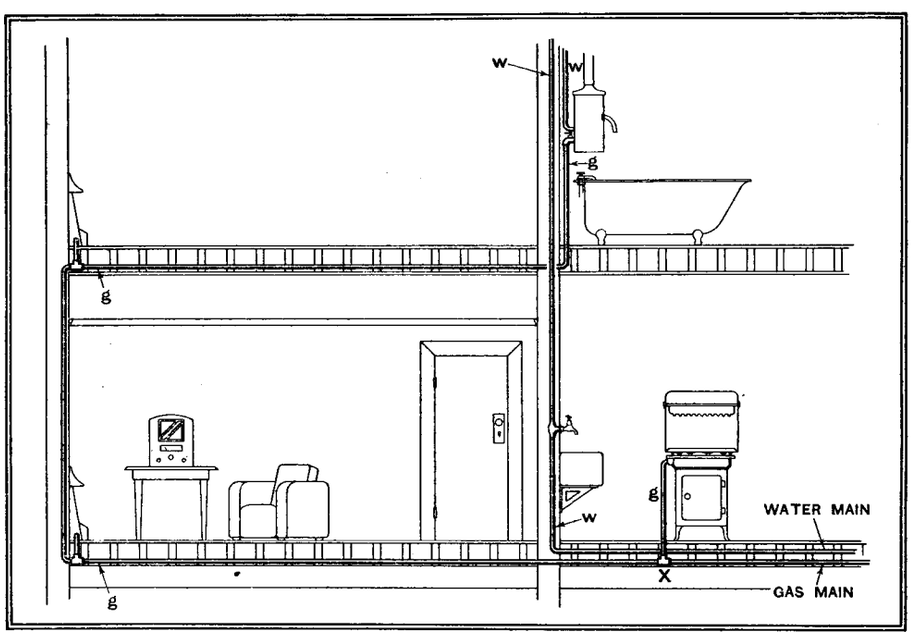

A "poltergeist" in quite the old tradition, but with a simple explanation. Signal strength falls when the cook approaches the gas stove because increasing pressure on the floor makes contact between the gas pipes (g) and the water pipes (w) at point X. A closed metallic loop around the frame-aerial receiver is thus formed.

The Radio Bogy—

of hot-water pipes lagged with asbestos. These were all half touching at various points throughout their length. Shaking the pipes produced every kind of weird and eldritch noise in the receiver—so long as it was tuned to a station. Naturally, if there was no station being received there was no incoming carrier wave to be "modulated" and the set was quite unresponsive to the most vigorous treatment of the pipes. In this case, either separating or bonding the pipes sufficiently was an almost hopeless task, particularly the pair which were lagged together and which were the worst offenders. Connecting the earth lead to different pipes in the flat led to no improvement, as all the supply pipes led back to the same conduit.

This was a case where a counterpoise earth proved fairly effective, and this is a solution that is always worth trying in difficult cases. If a counterpoise earth is tried for this purpose it should be run in such a way that its capacity to the unsatisfactory earth system is as small as possible. Further, steps should be taken to ensure that the high-frequency currents in the set cannot readily find any other path to earth. For instance, it would be as well to interpose high-frequency chokes in each leg of the mains supply to the set, for the mains, looked upon as an earth connection, will probably lead back to the intermittent contact, etc., which is the source of the trouble.

We can now summarise the method of tackling this form of trouble. Investigate the house, looking for intermittent contacts between conductors such as long pipes, especially if they run close to the earth connection of the set. Such contacts can often be traced by switching the set on and going round the house stamping on the floors, banging doors, etc. This is not a very restful process for the occupants, and should be completed as quickly as possible. When located, the intermittent contact should either be properly insulated or definitely bonded. The former will probably be the better course if the pipes are found to be absorbing energy from the high-frequency field (on the principle of the absorption wavemeter). On the other hand, if the offending pipes are close to a rather poor earth lead, bonding may result in a better earth. In every case a clean "home-grown" earth is strongly to be recommended; that is, a good connection into real earth joined to the set by an insulated wire kept as short as possible.

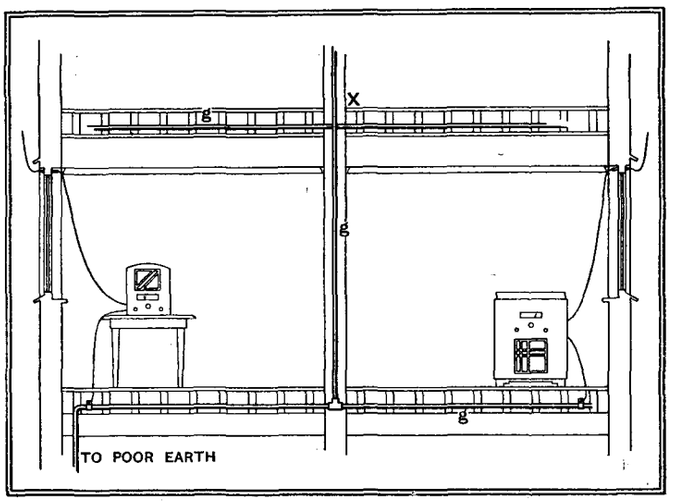

Two sets with separate aerials but a common earth; one tuned to the National and the other to the Regional transmitter. When point X on the general pipe system (g) of the building is disturbed, one or other station comes in loudly, but never both together. The explanation is that the whole pipe system tunes naturally to one or other station, according to which pipes are in contact. The two sets respond strongly to this owing to the common impedance of the poor earth.

Avoid Common Earths

In conclusion, one other case may be quoted which has a bearing on this problem. Variations in the strength of the local station had been noticed on a certain set, and, in particular, these were sometimes accompanied by a big deterioration in tone-quality, but no extraneous noises. The cause of this was again traced to the earth connection. This was a poor one, *via* a very indirect system of pipes, and it was found that another set was connected to an earth that used the same pipe system. The variations of strength depended upon whether or not the other set was tuned to the same station. The owners of this set were careful never to allow their set to oscillate. Nevertheless, their use of critical reaction was causing distortion, and was responsible for the deterioration of tone referred to above.

Once again the moral is: Use a good clean earth if you can. And we may now add: Having got it, keep it to yourself.

New 16 mm. Sound Film Equipment

Five Watts Undistorted Output

THE 16 mm. sound-film projector has created a niche for itself as a helpmeet for the wandering lecturer whose appointments in widely distributed places necessitate the smallest and most compact equipment.

Following on the success of its first 16 mm. sound-film projector, the British Thomson-Houston Co., Ltd., has now introduced an entirely new model incorporating several improvements on its predecessor. It comprises three main components, namely, the projector, mains unit and loud speaker unit, the last two being accommodated in one cabinet, which also provides space for spare spools and connection leads.

The all-mains three-stage amplifier is resistance-capacity coupled, using three Mazda valves and a rectifier. It gives an undistorted output of 5 watts, which should ensure ample volume for the average hall, lecture-room or class-room. A volume control is provided, together with a tone control for boosting higher frequencies. A 75-watt Mazda exciter lamp and B.T.H. cæsium type photo-electric cell are also used.

To enable the equipment to be operated from an AC 50-cycle supply on ranges from 100 to 125 or 200 to 250, an auto-transformer mains unit with a simple screw plug selector is used. The speaker is an R.K. of the permanent magnet type.

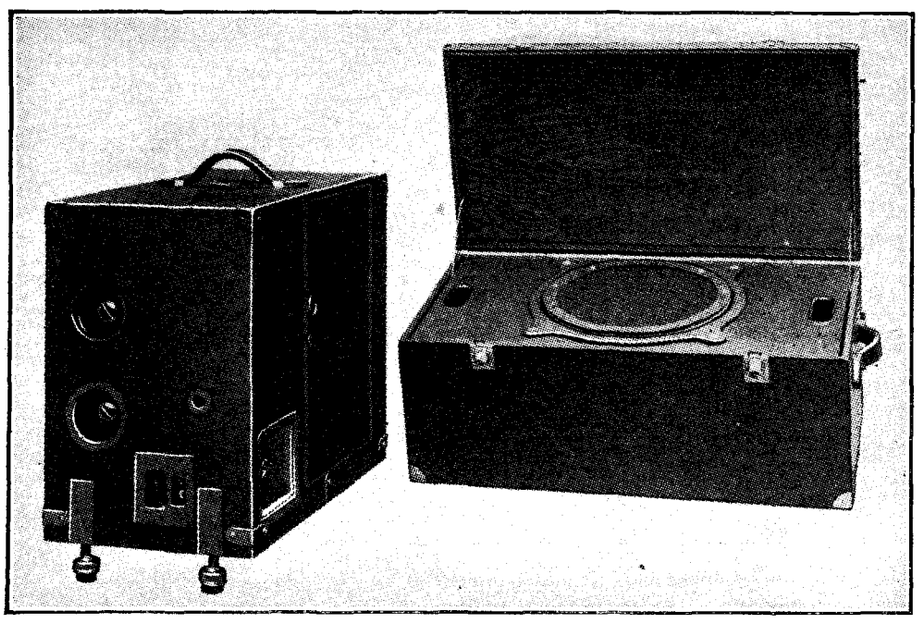

Extreme portability is a feature of the new B.T.H. 16 mm. equipment. These two cabinets comprise the complete installation.

BROADCAST BREVITIES

By Our Special Correspondent

"Secret Tests"

THE daily Press ran wild last week over an innocuous sentence in the B.B.C. official report on the "Chief Broadcasting Events of 1934."

"Research has been carried out," said the report, "on a hitherto unused method of transmission and the results were communicated to an International conference."

Fleet Street flung its cap in the air. A secret had been let loose.

Single Side-band Transmission

Actually these "secret new wireless tests" have been nothing more or less than experiments in single side-band transmission to which the B.B.C. had committed itself by an arrangement with the International Consultative Committee on Radio Communications (the C.C.I.R.) at its Lisbon meeting.

Mr. Ashbridge's Report

I understand that Mr. Ashbridge's report to the Committee would not encourage the supporters of the single side-band system, the pros and cons of which have already been discussed in several articles in *The Wireless World*. I would mention those of June 15th and November 2nd, 1934.

"Interference Free"

MANY British electrical manufacturers are anxious to fit suppressors to their products to avoid creating man-made static, and are interested in a scheme for providing a British Standards Institution stamp which would be awarded to apparatus found to be "radio interference free."

Before, however, such a stamp could be issued it would be necessary to specify the maximum interference which a piece of apparatus might be allowed to emit, and manufacturers would have to be provided with measuring instruments.

To obtain a standard is the object of the negotiations which have been undertaken by German and British engineers.

Tests in Berlin

The Germans have already arrived at a tentative standard of measurement, and between now and the end of March Britain and other countries will carry out tests for discussion in Berlin during the spring.

With television in the offing it is more than ever necessary that the bugbear of electrical interference should be suppressed.

Honours for B.B.C. Men

THE New Year's Honours List will not increase the number of salaams and salutes at Broadcasting House, for only two members of the staff appeared in it.

Mr. Percy Edgar, the veteran director of the Midland station, received an O.B.E., while an M.B.E. was bestowed on Mr. Stuart Hibberd, the chief announcer.

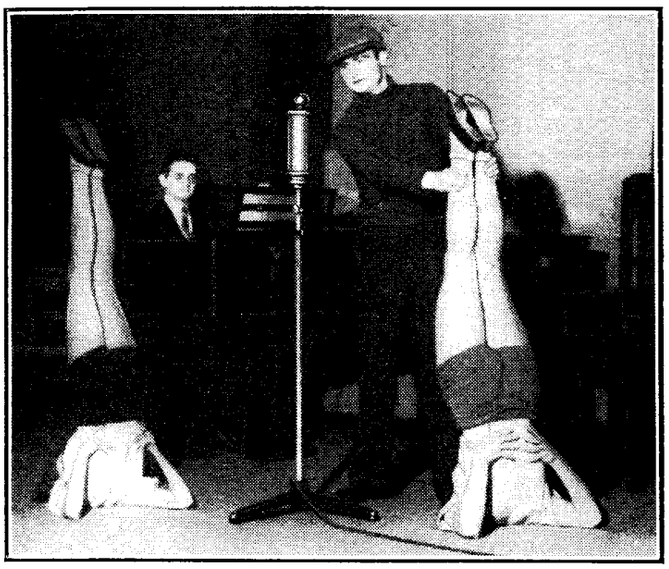

BREAKFAST BROADCASTING. The news that Mr. Gladstone Murray is considering the inauguration of breakfast broadcasts by the B.B.C. does not mean that "physical jerks" will be transmitted, as at Berlin, where this picture was taken. Light music would be the B.B.C. choice.

The Announcing Profession

The latter award is a real honour to the announcing profession, which has not hitherto had the *kudos* it deserves. Mr. Hibberd, as chief announcer at the B.B.C., invariably handles the more important ceremonial events.

Stage Fright

Announcing, like sword swallowing, appears easy and is actually difficult. Both Hibberd and Grisewood have told me that "stage fright" is never far away. Both of them approach a news bulletin with trepidation, for it may contain pronunciation traps and even faults in construction which must be tackled without a moment's hesitation. The microphone has no mercy.

"It is fatal," Hibberd once told me, "to attempt to visualise the millions who may be listening. I always concentrate my thoughts on the idea of an individual friend listening at home."

John Watt's Record

LAST week *The Auditor* made the bold assertion that John Watt directs more programmes than anyone else at Broadcasting House. This flashed across my mind when I ran into John Watt at the Dorchester Hotel a few days ago, and I bluntly asked him how many shows he had produced in the last three months.

He laughed in that disarming fashion which must be partly responsible for his success in managing temperamental artists, and, without hesitation, said: "Twenty-four shows in thirteen weeks."

Art that Conceals Art

Some of those, of course, include diagonalised programmes, but the feat is none the less remarkable. I doubt whether anyone else in Broadcasting House could stand the pace.

John Watt has a unique microphone manner. Everything he says seems to have tripped off his tongue spontaneously. This is real art.

Breakfast Broadcasts

MR. GLADSTONE MURRAY, who has always favoured the notion of broadcasting at breakfast, is now Acting Director of Output. I understand that during his tenure of this office he will make a bold bid to introduce programmes of light music at 8 a.m.

Midland Regional Testing

ANY early morning after 00.00 you may hear the new Midland Regional transmitter testing on the 5GB wavelength of 391.1 metres. Actually the signal strength is now more powerful than it may be when the station comes into regular service towards the end of February, for the wavelength may then be lowered, as exclusively forecast in *The Wireless World*, to 296.2 metres.

A Good Stand-by

Quality is good, and my only hope is that this 50-kilowatt station will not disappoint in the manner of its 150-kilowatt neighbour. The old 5GB has always been a reliable stand-by to London listeners, and it would be pleasant to think that the Daventry medium-wave station will always be available when the National and London Regional, as so often happens, are a weariness to the flesh.

Dance Band Wants Criticism

ON February 4th Geraldo and his Band are to give another Non-Stop Dance programme. These non-stop parties have proved exceptionally popular, judging by the reaction of listeners and the numbers of letters received asking for repeat performances.

Geraldo and his Band welcome any kind of criticism, and will be very pleased to hear in what way listeners think this type of programme could be improved.

During the programme listeners will hear Eve Becke, who is well known for her work in "Air-do-Wells."

Choosing an Interval Signal

HEADQUARTERS have left it to the provincial stations to choose their own interval signals, and many and wonderful have been the suggestions made.

What could be more nightmarish to business men than the proposed Midland interval signal of "a typist at work"? For Manchester "the patter of raindrops" has been suggested. The idea of bagpipes for the Scottish stations seems good at first sight, but there are so many bagpipe turns in the Scottish programmes that one might wait twenty minutes, imagining that an interval was in progress when an actual concert was being broadcast.

Send me your selections on a postcard, and may the best one win.

New Apparatus Reviewed

Recent Products of the Manufacturers

B.S.R. HEAVY-DUTY OUTPUT TRANSFORMER

THIS output transformer is designed for use either with a pair of DO26 or DO60 valves connected in push-pull, and as it is required to handle some twenty watts it is built on very generous lines, the core measuring 3¾in. × 4¼in. × 1¾in. This particular model is for the use of a loud speaker of 7.5 ohms or of 15 ohms impedance, or several loud speakers connected so that the sum of their impedances amounts to either of these values may be employed.

The primary winding consists of three sections, the centre part being proportioned to provide the correct output ratios for DO60 valves and the additional primary sections are joined by external links to each end of the main primary for DO26 valves.

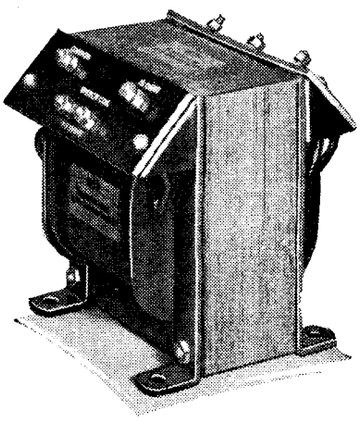

B.S.R. heavy-duty push-pull output transformer designed for DO26 or DO60 valves and 7.5- or 15-ohm loud speakers.

The inductance of the whole primary was found to be 35 henrys and its resistance 114 ohms, while that of the centre section alone, which is used for the larger power valves, is 16.4 henrys and the DC resistance is 70 ohms. This transformer has a particularly good frequency characteristic, being sensibly flat from 30 c/s to 10,000 c/s, and between these two limits the output does not vary by more than 0.5 decibel. From the shape of the curve it can be seen that very little loss is likely to occur at frequencies far higher than that covered by our tests. This curve was taken using valves of similar characteristics to the DO26 and it is representative of the output obtained from the 7.5-ohm and the 15-ohm secondary, there being far too small a difference between them to show on the graph.

B.S.R. heavy-duty output transformers are built to meet special requirements only, models to suit any combination of output valve or valves and loud speaker can be supplied and, accordingly, the price will be governed by the specification.

The makers are Birmingham Sound Reproducers, Ltd., Claremont Works, Claremont Street, Old Hill, Staffs.

PHILCO SHADOW TUNING METER

RECEIVERS embodying automatic volume control are often fitted with a visual tuning indicator, but as this aid to correct adjustment is not universal the Philco Radio and Television Corporation of Great Britain, Ltd., Aintree Road, Perivale, Middlesex, has introduced a tuning indicator assembled in a neat case that can be used external to the set if necessary. It is described as a Shadow Tuning meter for, although the mechanism is similar to that of a milliammeter, it is fitted with a vane in place of the customary pointer that throws a shadow on to a translucent window.

The shadow varies in width with change of current through the meter, so that when joined in the anode lead of one of the valves included in the AVC circuit the shadow will

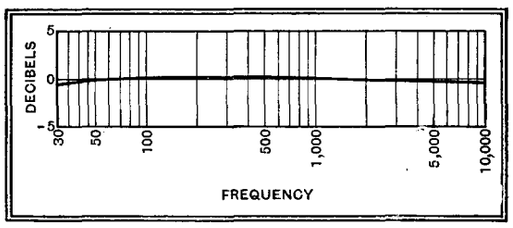

Response curve of B.S.R. heavy-duty output transformer.

widen or contract with any change of current in the anode circuit of the valve.

With the valve passing a steady current of about 6 mA. the shadow is approximately ½in. wide, and with no current it contracts to less than 1/16in. We found the meter sufficiently sensitive to respond to a change in current of one milliamp, thus it provides a most useful visual indication of the optimum tuning point for all broadcast transmissions sufficiently strong to affect the AVC circuit.

The unit would serve as an indicator when different styles of aerials were tried or whenever an alteration is made to the set, improvements being indicated by a greater contraction of the shadow for any given station. It measures 4¾in. × 3in. × 2⅛in. and has a resistance of approximately 1,000 ohms.

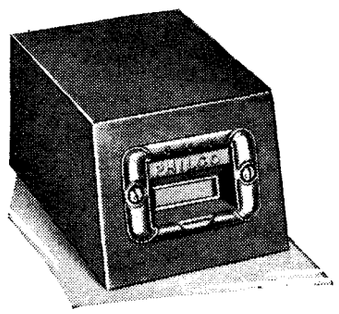

Philco Shadow Tuning meter for use with receivers equipped with AVC.

Five leads of different colours are woven into a neat cable, these feed HT current to the meter, LT to the illuminating lamp, and one lead is the earth return for a built-in HF by-pass condenser.

A well-prepared instructional booklet containing circuit diagrams showing the method of connection for different circuits is supplied and the price is 24s. 6d.

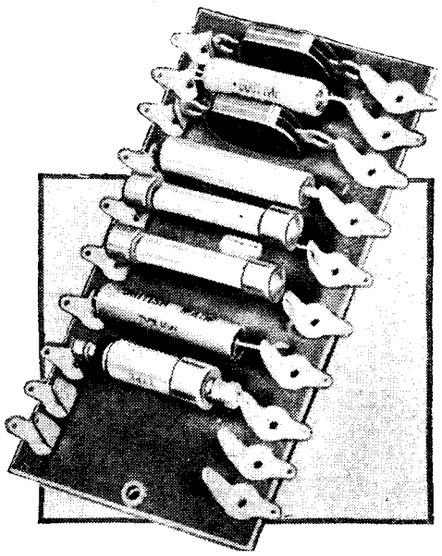

Bulgin ten-way Group Board.

BULGIN GROUP BOARDS

IN order to provide a convenient medium for mounting fixed resistors, tubular and flat condensers, also Westectors, so that they are neatly arranged, A. F. Bulgin and Co., Ltd., Abbey Road, Barking, Essex, has introduced a Group Board. This consists of a bakelite base, to which is riveted a double row of soldering tags spaced 2in. apart.

It makes for a very neat and tidy layout of the underside of the baseboard, for all these small items are grouped together, whereas often they are arranged in a not too orderly manner.

Two styles are available; one holds five of these components, and the other ten, and they cost 1s. and 1s. 9d. each respectively.

MURPHY PROGRAMME FOR 1935

IMPORTANT changes, effective from the beginning of the present year, are announced by Murphy Radio. The present "24" series of receivers, including consoles, are reduced in price; the table sets now cost £13.

In the spring and early summer two new series of receivers are to be introduced. The first will comprise a lower-priced category of table sets, consoles and radio-gramophones. Models for AC mains, for battery feed, and for use interchangeably on AC or DC are included; the last-mentioned will take the place of sets for DC only. The more expensive sets will be consoles and radio-gramophones for AC or DC supplies only.

As before, Murphy receivers will be obtainable only from a limited number of specially appointed dealers; the aim of the firm is to select one such dealer in each shopping centre throughout the country.

A Useful Idea for a Milliammeter

Automatic Self-adjustment for all Current Values

A "SAFETY - FIRST" testing device : modifying an ordinary meter to prevent risk of damage through overloads.

By "CATHODE RAY"

FOR general testing, fault-tracing, etc., a single milliammeter, however good, is not tremendously useful. When it is connected in a circuit to measure the current, one of three things happens. The pointer may move over the scale and give a conveniently readable deflection. That is exceptionally lucky. Secondly, the pointer may make some slight effort to move, but not enough to be read properly. That is merely futile. Thirdly, the pointer may fly off the scale altogether and try to wrap itself round the stop. That is disastrous. Even when subsequent test shows it to be still working, its indications are under grave suspicion.

If one were rolling in lucre, a possible solution would be a whole row of milliammeters, so that at least one of them would give a readable deflection on any current. Apart from the lucre difficulty, this method wastes a great deal of time and patience in selecting the right meter by trial and error; and the error part of it is apt to prove expensive.

The more practical form of equipment is a multi-range milliammeter. If you can remember always to start with the switch at the highest range there is not so much risk of bumping the pointer. But even in the hands of a perfect Pelman there is trouble when the current suddenly decides to increase overwhelmingly without warning. Accidents *will* happen.

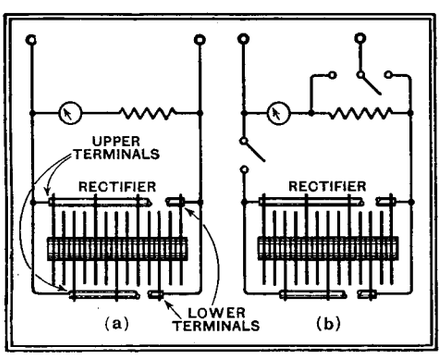

Fig. 1.—(a) Method of connecting the rectifier shunt. (b) Addition of switches for disconnecting the shunt and series resistor.

A meter that has a full-scale reading of 1,000 milliamps. (and which can therefore be connected with confidence in any reasonable radio circuit) and yet which reads down to a fraction of a milliamp., and everything in between, without switching, sounds too good to be true. And so it is if accurate readings are expected. But for rough test work—which is the sort that is hard on low-range meters—an approximate indication of the current tells one most of the story.

Here is the recipe. But first of all a spot of theory to make sure that the principle is clear. The nucleus of the ordinary multi-range milliammeter is a comparatively sensitive indicator for the lowest range. The higher ranges are switched in by lowering the resistance of the shunt which by-passes the excess current. If the milliammeter itself requires 5 milliamps. to give a full-scale reading, it is necessary to shunt 45 milliamps. in order to convert it into a meter reading up to 50. Supposing the resistance of the meter itself is 15 ohms, the voltage to give full-scale reading is 5×15, or 75 millivolts. So the resistance of the shunt must be 75/45, or 1.67 ohms. Using Ohm's Law in the same way to find the shunt for a 500-milliamp. range, we get 0.1515 ohms.

Self-regulating Shunt

The ideal arrangement would be a shunt that automatically adjusts itself to the current that flows. With a very small current the shunt resistance would be very high, so as to allow the meter to give as clear a reading as possible; then if a much heavier current passed, the shunt resistance would drop and accept the dangerous surplus.

One has not far to look to find such an accommodating shunt; the ordinary metal rectifier answers perfectly to this description. But it has one snag: the resistance depends not only on the current but also on the temperature, which is quite irrelevant to the business on hand. A thermostatically controlled container would add rather objectionably to the cost so one has to be prepared for slightly larger readings in summer than in winter. Actually the difference in deflection is not at all huge, but because the scale covers such an enormous range of current the temperature error is bad, judged by the normal standards. Still, it is useful in fault-finding to be able to check the currents within 10 per cent. or 15 per cent. With a little common sense one can allow for the grosser errors and get considerably nearer the mark.

I find that a useful instrument can be built around an ordinary 0-5 milliammeter and a Westinghouse LT4 rectifier. It would be better still if a rectifier with half as many discs could be got. Then the voltage required to work the meter could be halved, too; at present it is rather high—about 0.19 volt for 1 milliamp., and 1.4 volts for 1 amp. This makes it unsuitable for accurate measurements of 2-volt filament currents, but it is quite satisfactory for most other uses.

The circuit is simple enough (Fig. 1 (a)). Note that each lead to the rectifier is attached to *both* rectifier terminals at that end. The only other component is a resistor to make up the meter resistance to about 300 ohms (in this example). About 10 yards of 40-gauge Eureka, or correspondingly less of finer gauges, are cut by trial until full-scale deflection is given by 1 amp.

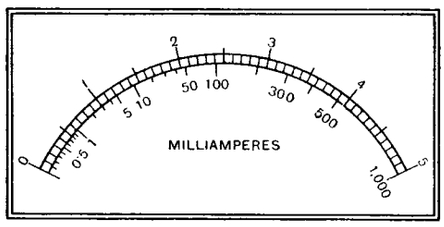

Fig. 2.—Scale of shunted meter compared with the original one to show the wide range of current that can be measured.

It is a sensible thing to do this, and the calibration of the scale, during local conditions that may be described as "average temperature." This minimises the possible temperature error.

Some ingenuity may have to be exercised in borrowing a multi-range milliammeter for calibration purposes. A battery and assortment of resistors, fixed or variable, are also required. A tapped HT battery is best for the low currents, and an accumulator for those above 50 or 100 milliamps. Everything is connected in series, and comparisons made between the actual current as shown by the multi-range instrument and the scale reading on the rectifier-shunt meter. These are tabulated for a dozen or so readings, and a curve drawn connecting the two. From this it is possible to find and mark the scale divisions.

Most meters now have bakelite or other non-metallic cases; but when it is iron it is best to remove the glass and replace the cover if the scale is to be marked directly from the deflections, because they may be different with the cover off. When the cover is removed the guarantee is usually rendered void by the breaking of a seal; but as the meter will never be driven off the scale in future, why worry?

If the instrument is a really good one, you may not care to have it tied up for ever to an admittedly inaccurate system, so Fig. 1 (b) shows how to switch over to the unshunted meter. But it may then be more difficult than ever to remember to take care of it.

★ ★ ★ Listeners' Guide

Outstanding Broadcasts

FRED HARTLEY and His Novelty Quintet make two microphone appearances this week—to-night (Friday) and Wednesday next, on both occasions at 7.30 on the National wavelengths. In the picture Fred Hartley is seen at the piano.

ENTER RUSSIA

VIENNA, so long triumphant, is fighting a losing battle at Broadcasting House. True, we have this week John Hendrik in "Viennese Caprice"—a musical and romantic fantasy by George Gordon, to be broadcast on Regional wavelengths at 6.30 on Tuesday, January 15th. But another quarter of Europe—Russia—claims our attention on two nights.

Two Russian tales will be told dramatically. The first, on Regional wavelengths (Monday, 6.30-7.30) is "Footsteps in the Snow: a tale of Russia before the War," by C. Denis Freeman and Mark Lubbock. The part of The Girl will be taken by Gilliam Sandlands, and that of the Young Man by Peter Du Carlios. Ina Souez, Leon Hockloff and Jan van Der Gucht will sing.

Then, on Wednesday at 8.15, the National wavelengths will give us "Azeff," a melodrama of Czarist Russia by C. F. Noxon and L. Gilliam, produced by Lance Sieveking.

THREE-PIANOFORTE CONCERTO

A CONCERTO for three pianofortes is a musical rarity. On Monday at 8.10 p.m. the Leipzig Symphony Orchestra includes in its programme Mozart's three-pianoforte Concerto in F. The same station will relay a concert from Dresden on Thursday, January 17th (9.20 to 11 p.m.) by the Dresden Philharmonic Orchestra. Chopin's pianoforte Concerto in E Minor and Mozart's Symphony No. 35 in D will be played.

FRENCH COLONIAL RELAY

THE first opportunity to hear a relay direct from France's Colonial station at Pontoise occurs on Thursday between 3 and 4 p.m. (Regional). The concert will be provided by the Radio Coloniale Station Orchestra conducted by Jean Clergue, and is described as "Ce Qu'on Chant à Paris."

BROTHER ELIAS

FOR ten years the students of University College have given an annual performance of one of the "Little Plays of St. Francis" by Laurence Housman. Their eleventh annual performance is to be broadcast on Sunday afternoon (Regional, 9), and they have chosen "Brother Elias."

These human little plays, which bring St. Francis of Assisi to life as a very lovable being, seem to grow in popular estimation from year to year. The events of "Brother Elias" occur several years after the Chapter of the Brotherhoods, held at Assisi in 1221, when Elias received authority over the Order from the hand of the Saint.

"SERENADE" AT LAST

MORE than once I have pleaded for B.B.C. "Serenades" of the type given by the German stations from 10 o'clock onwards, consisting of soothing items, classical and semi-classical, which offer an agreeable contrast to the jazz which prevails at that hour.

"Serenade" is the title of the concert, lasting an hour, to be given by the B.B.C. Orchestra (Section E) at 10.15 on Thursday next (National) under the direction of Frank Bridge. The programme includes Mozart's "Il Seraglio" and Mendelssohn's Scherzo for "A Midsummer Night's Dream."

THE WINTER'S TALE

MISS DIANA WYNYARD, the stage and film star, makes her broadcasting début in England on Sunday next, January 13th, in Shakespeare's "The Winter's Tale," which will be broadcast at 5.30 in the National programme. Miss Wynyard will be Hermione.

The play has been adapted by Howard Rose, and the incidental music arranged by Robert Barclay Wilson.

A HANDEL REVIVAL may result from the celebrations connected with the 250th anniversary of the composer's birth in 1685. The "Foundations of Music" this week are entirely devoted to Handel's works.

DURING THE SAAR PLEBISCITE

ALL German stations will be broadcasting the same programmes throughout Sunday so that announcements concerning the Saar Plebiscite can be made at frequent intervals. The various regions will supply hourly contributions; for instance, Frankfurt at 7 o'clock gives an orchestral concert with soloists, and at 9 o'clock Cologne contributes music by Leo Eysold and his band. Leipzig follows at 10 o'clock with light music by the Symphony Orchestra. Stuttgart will supply the network with dance and folk music from 11 p.m. until 1 a.m. on Monday.

SIGNORINA MARIA BONCOMPAGNI can lay claim to being the most famous woman announcer in Europe. Her "Radio-Rome-Napoli" call is heard every night by thousands of listeners in Britain.

HE HAD TO HAVE MUSIC

"I'VE got to have music," was the remark which slipped from the lips of Austen Croom-Johnson the other day, and instantly he had a ready-made title for a new series, which opens on Thursday next (National, 9). This musical half-hour will consist of a "news reel of shows playing in town," and the important point is that the medley has been especially orchestrated by Eric Siday. There are to be six vocalists, all with very marked individual characteristics.

for the Week

at Home and Abroad

"PAGANINI"

Many listeners would travel half across a Continent to hear a Lehar operetta, so I do not hesitate to recommend the Bucharest programme between 7 and 9 p.m. on Sunday. The item is the Lehar operetta "Paganini."

A BACH ENTHUSIAST

DR. HAROLD DARKE, who broadcasts an organ recital on Wednesday next (Regional, 7) from Chelsea Parish Church, is famous among City workers for his frequent midday recitals in St. Michael's, Cornhill.

His favourite composer is Bach, extracts of whose works are included in next Wednesday's programme.

"GEORGE FREDERICK"

THE Foundations of Music series is being run on more grandiose lines than usual this week to commemorate the 250th anniversary of the birth of George Frederick Handel. A section of the Boyd Neel String Orchestra is being enlisted to provide examples of the Master's works, and on Wednesday, January 16th, Section C of the B.B.C. Orchestra will play.

OPERA

BERLIOZ'S opera, "The Damnation of Faust," will be relayed by Strasbourg from the Municipal Theatre, Metz, on Wednesday, January 16th, at 8.45 p.m. On the same day "Paradise and the Peri," Schubert's famous choral composition, will be broadcast by Konigsberg at 8.10. Verdi's ever-popular "La Traviata" comes from the Opera House, Rome, at 8 o'clock on Wednesday, the 16th.

Lehar's operetta, "The Dance of the Dragon Flies," will be broadcast by Milan on January 15th at 7.45.

SOPHISTICATED REVUE

THE "January Revue" introduces something new in the broadcast variety line. The revue will be heard at 10 o'clock on Wednesday (National), and listeners will discover a very sophisticated "West End" type of entertainment as opposed to the more "broad humoured" productions such as concert parties, variety programmes and "Music Hall."

Eric Maschwitz will direct these monthly revues, and the music for the first is by Jack Strachey.

PIANOFORTE RECITALS

ON the early loud speakers the pianoforte was as a tinkling cymbal, but nowadays, despite the absence of certain desirable harmonics, wireless pianoforte recitals can really be enjoyed.

There are several of these this week. Alfred Cortot will be heard on Monday evening in a relay from Strasbourg between 9 and 10.30 p.m. in a recital from the Soudant Concert Hall, Metz.

The weekly Chopin recital from Warsaw will be given by Marie Jonas on Wednesday at 8 o'clock. On the following evening at 7.45 p.m. Josef Wagner will be pianoforte soloist at Rome.

ENGLISH TALKS FROM POLAND

No fewer than three talks in English for the special benefit of British listeners will be relayed by Warsaw and other Polish stations during the week. The first is at 9.45 p.m. on Tuesday and the second at 8.30 on Wednesday. On Thursday at 9.45 Mr. Thad Ordon will reply to letters he has received from listeners in this country.

Mr. Ordon has a pleasing English style.

TEA-TIME SURPRISES

JOHN MACDONNELL holds his first "Tea Party" to-morrow afternoon at 4.15 (Regional). Macdonnell invented the Surprise Item—so anything may happen.

THE AUDITOR.

ICE HOCKEY AT DAVOS. The ice hockey world championship matches are to be fought out at Davos, Switzerland, during the third week of January. Running commentaries in French and German will be given from Austrian, Swiss and French State stations.

HIGHLIGHTS OF THE WEEK

FRIDAY, JAN. 11th.

Nat., 7.30, Fred Hartley and His Novelty Quintet. 8.35, B.B.C. Orchestra (Section C).
London Reg., 8, Commodore Grand Orchestra. 9.30, Organ Recital by Marcel Dupré.
Abroad.
Kalundborg, 7.5, Part Relay of "The Magic Flute" (Mozart) from Royal Opera House.

SATURDAY, JAN. 12th.

Nat., 7, "In Town To-night." 8, Last Promenade Concert of Season; Solo Pianist: Pouishnoff.
London Reg., 4.15, John Macdonnell's Tea Party. 8, Maurice Winnick and His Orchestra. 8.40, Conversations in the Train—II. 9, "Music Hall," with Edith Day, Julian Rose, etc.
Abroad.
Rome, 8, Opera: "I Capuleti e i Montecchi" (Bellini).

SUNDAY, JAN. 13th.

Nat., 5.15, Hints for Daily Living—IV, by the Rev. Canon H. R. L. Sheppard, C.H., D.D. 5.30, "The Winter's Tale" (Shakespeare). 9, B.B.C. Theatre Orchestra.
London Reg., 4.30, Walford Hyden Magyar Orchestra. 5.30, Wireless Military Band. 9, "Brother Elias" (Laurence Housman) by the University College Dramatic Society.
Abroad.
Brussels No. 1, 8, Grétry Concert for Belgian Music Week.

MONDAY, JAN. 14th.

Nat., 8, Pianoforte Recital by Horzowski. 8.30, "Songs from the Films"—VI. 10, Chamber Music by the Italian Trio.
London Reg., 6.30, "Footsteps in the Snow: a Tale of Russia before the War." 7.30, B.B.C. Dance Orchestra. 8.15, Unaccompanied Choruses by the Wireless Chorus (Section A).
Abroad.
Paris PTT, 8.30, Opera: "Don Pasquale" (Donizetti).

TUESDAY, JAN. 15th.

Nat., 8, Mr. Murgatroyd and Mr. Winterbotham. 8.15, Concert by the London Philharmonic Orchestra, conducted by Leslie Heward.
London Reg., 6.30, "Viennese Caprice" (from Belfast). 8.15, The Air-do-Wells.
Abroad.
Leipzig, 7.10, Strauss Concert, by Leipzig Symphony Orchestra.

WEDNESDAY, JAN. 16th.

Nat., 7.30, Fred Hartley and His Novelty Quintet. 8.15, "Azeff," a Melodrama of Czarist Russia. 10, "The January Revue."
London Reg., 7.30, The B.B.C. Orchestra (Section E). 8.30, "Sorry We Can't Stop."
Abroad.
Rome, 8, Opera: "La Traviata" (Verdi).

THURSDAY, JAN. 17th.

Nat., 8, The Wireless Military Band. 9, "I've Got to Have Music." 10.15, "Serenade."
London Reg., 3, Relay from Radio Coloniale (Paris) 7.30, Halle Concert, Orchestra conducted by Nicolai Malko.
Abroad.
Radio Paris, 8.45, Spanish Concert by the National Orchestra.

UNBIASED By FREE GRID

Thankless Neighbour

IT is the last back-breaking straw at which the drowning camel is reputed to clutch, and we have, I think, just about reached it. Ever since Christmas Day my wireless reception has been ruined by a background of crashes and roars which sound like Bedlam let loose. And the cause of it? Nothing more nor less than those confounded strings of fairy lights which have been sold in their thousands this year for decorating Christmas trees and similar pieces of foolishness.

I have no complaint to make concerning the lights themselves, but it is the "flashers" sold with them which have roused me to anger. These wretched devices are intended to give a pretty (?) effect by causing the lights to pop on and off several times a minute. Not the slightest attempt is being made by the authorities to compel purchasers to buy suitable suppressor apparatus also, and the net result is the horrible noises which are the subject of my complaint.

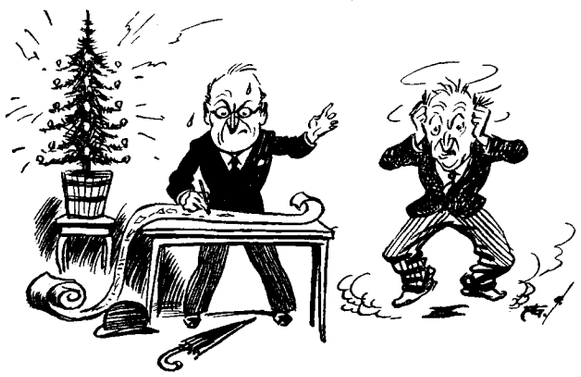

I went to very great trouble.

Furthermore, the users of these "decorations" are quite shamelessly impertinent and defiant about the whole matter. I went to very great trouble to sketch out an elaborate circuit, consisting of large chokes and condensers, to give to my neighbour, who had squandered 2/11 for a string of these loathsome lights, but I received only gratuitous insolence in return, being told that he would buy the apparatus on the same day that I put up sound-proof walls to prevent my loud speaker disturbing the slumbers of his intolerable twins.

It is perfectly useless for the more public-spirited of us to go to all the trouble and expense of equipping our domestic appliances with suitable anti-static devices if irresponsible people of this sort are allowed to carry on in this shameless manner, completely disregarding the welfare and comfort of their fellow citizens. To appeal to their better natures is about as hopeless as putting your trust in the humanitarian instincts of a tax-collector.

Not Forgetting the X's

NOBODY can deny that the B.B.C. officials rightly deserve all the encomiums that have been bestowed upon them for their truly prodigious efforts in "Empire Exchange" on Christmas Day.

The statement, published in *The Wireless World* and elsewhere, pointing out that Blattnerphone records were used to sketch in certain background effects, does not seem to have put the quietus on certain unimaginative critics. I think that the people responsible are entitled to every praise for the judicious use of records here and there in the programme.

There was, however, one point regarding the use of records which to my mind reveals the master touch of true genius. Curiously enough, nobody seems to have noticed it; at least, I have not seen it mentioned in any newspaper. I refer, of course, to the superimposing of atmospherics on to the records. Not only did these atmospherics give the illusion that the broadcast was coming from a long distance, but, what was more important, they served to drown out the needle-scratch—or rather the hissing sound which, in the Blattnerphone, is its counterpart. The net result was most realistic.

The man who waggled the potentiometer in order to give the illusion of periodical fading during the records is also deserving of honourable mention. Needless to say, my interest was aroused concerning the exact methods used to produce these atmospherics. Had they emanated from another record they would, owing to the presence of yet another source of needle-scratch, have defeated one of their own ends. There were no appreciable atmospherics available in England on Christmas afternoon, and so the B.B.C. were put to considerable trouble and expense in securing this realistic finishing touch to the programme.

I think it not unlikely that the B.B.C., through the agency of a foreign broadcasting service, established a special station in the tropics, where the atmospherics were collected in a suitably positioned microphone and then passed to a powerful short-wave beam transmitter. From there they were sent out in the usual way and picked up by the B.B.C. short-wave receiving station, and passed thence to Broadcasting House by landline. Thousands must have thought them genuine.

A Ridiculous Notice

A KIND-HEARTED reader telephoned to one of my private secretaries the other day, calling my attention to an ingenuous notice exhibited in the car-accessories department of a certain London store which was featuring a popular car-radio receiver.

Needless to say, I lost no time in calling at the establishment and was certainly intrigued at a notice to the effect that oscillation and other interfering noises were caused by the efforts of the radio department on the first floor. Curiously enough, the establishment in question is opposite to another one where, in the midst of a heterogeneous collection of wireless sets and anti-static devices exhibited in the radio department, there appeared some time ago a notice stating that the "noises off" were provided by the lift motors.

This sort of thing is, of course, about on a par with a theatre craving its patrons' pardon for the non-Shakespearian epithets of the scene-shifters. I mentioned this analogy to a smart young man in the shop, but, alas! my remarks were received coldly—almost frigidly.

The young man, after stating that all theatrical queries must be referred to the entertainment booking bureau upstairs, further informed me that in any case it was impossible for a question to arise concerning the language of any performer or stage assistant supplied by the firm, as only people of unimpeachable integrity and behaviour were retained upon the books. I must, he thought, be confusing his firm with an unprincipled rival.

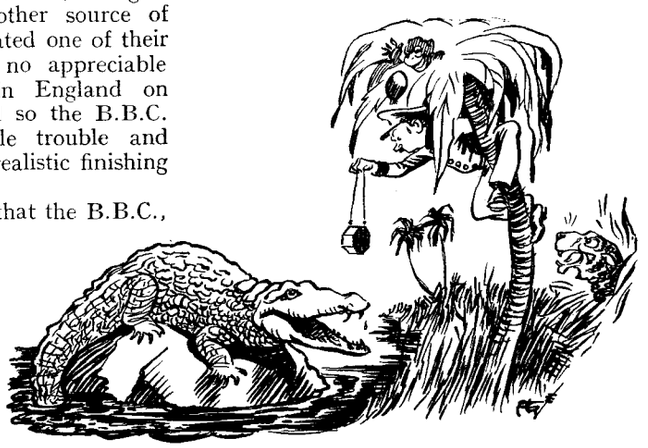

Suitably positioned microphone in the tropics.

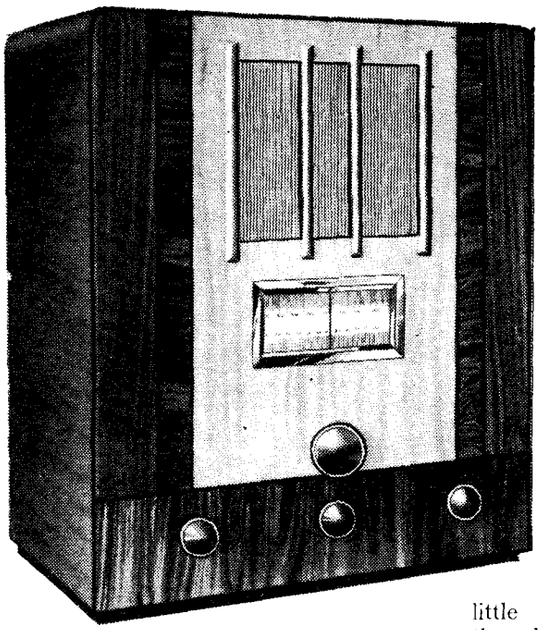

DRUMMER

MODEL M65

A Sensitive and Selective Superheterodyne Including a Short-wave Range

FEATURES.—*Type.*—*Table model superheterodyne for AC mains designed for long-, medium- and short-wave reception.* ***Circuit.*—*Heptode frequency changer — var.-mu IF amplifier — double-diode-triode second detector — pentode output valve. Full-wave valve rectifier.* ***Controls.*—*(1) Tuning. (2) Volume and on-off switch. (3) Tone. (4) Waverange.* ***Price.*—*17 guineas.* ***Makers.*—*Edge Radio Ltd., Bolton, Lancs.***

THERE can be no doubt the short wavelengths have a very definite entertainment value now that regular broadcast services are daily increasing in number in this region of the ether spectrum. It is true that reliable reception is more susceptible to meteorological conditions and the state of the upper atmosphere than in the longer wavelengths, but when conditions are favourable the signal strength, even of American stations, is amazingly good, and in this lies the special attraction of short-wave reception.

The short-wave range covered in this set is from 20 to 50 metres, and this includes all the more interesting short-wave transmissions. Quite good results were obtained on this waverange with only the mains aerial in operation, but for really serious work a good outdoor aerial is recommended. Under the latter conditions the general feel of the controls indicated that the receiver should be capable of extracting the maximum entertainment from the short-wave band under all circumstances. Tuning is a little critical in the lower half of the short-wave range, but this is inevitable, as a compromise is necessary with the requirements of the medium- and long-wave ranges. However, one very soon discovers the knack of slow and steady rotation of the tuning knob, and learns to anticipate the "repeat points" of each station. Incidentally, the alternative setting often proves useful in avoiding interference, and may also provide an increase of signal strength.

High Sensitivity

The overall sensitivity of the set on all three wavebands is exceptionally good, the more so as there are only four valves in the circuit. The performance in this respect is amply supported by the selectivity, which can quite confidently lay claim to the magic figure of 9 kc/s on all stations except the local, where one channel might possibly be lost on either side. On long waves the reception from the Deutschlandsender was unusually clear of interference from Droitwich and Radio Paris.

Such high selectivity generally means some loss of high-note response, and with the receiver accurately tuned this was certainly noticeable, even with the tone control in the "high" position. It could be corrected to some extent by very slight mistuning, but this had to be done with care, as the set was rather prone to "side-band shriek." Curiously enough, the receiver seemed to perform better from the quality point of view on weak signals, as there were signs of overloading on strong signals before the output valve had reached its full capacity; not, however, before an adequate volume for the average living-room had been obtained. Incidentally, the importance of judicious use of the volume control is stressed in the instruction book.

In general arrangement the circuit is quite straightforward, but it is interesting to note that iron-cored inductances have been used for the medium- and long-wave band-pass, oscillator and IF coils. The short-wave coils are space-wound on bakelised formers and are suspended in the wiring underneath the chassis.

The heptode frequency changer is preceded by a band-pass input filter, and the IF amplifier is of the variable-mu type.

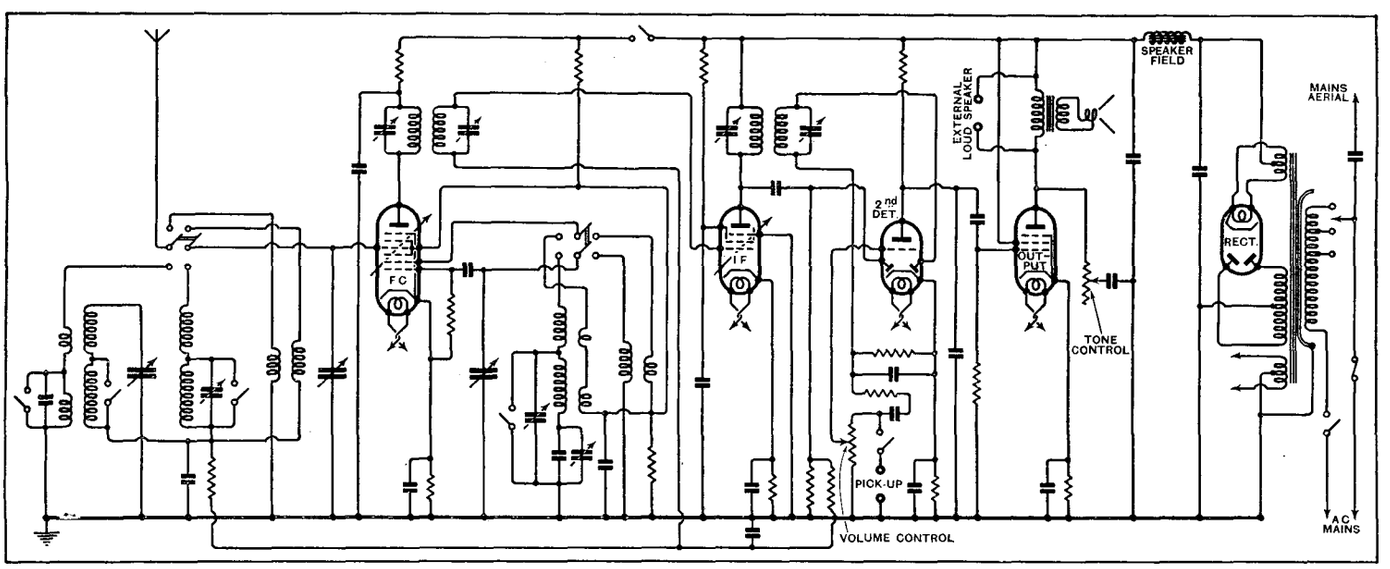

Iron-cored coils are used throughout for medium and long wavelengths. Separate air-spaced coils are brought into circuit for the short-wave range.

Drummer Model M65—

Both this and the frequency changer are fully controlled by the AVC circuit, the bias for which is derived from one of the diodes in the double-diode-triode second detector.

The output valve is a pentode capable of delivering from $2\frac{1}{2}$ to 3 watts undistorted. A resistance-capacity tone control is connected in the anode circuit, and sockets are provided in parallel with the output transformer for the connection of an external loud speaker. The internal speaker is an energised Celestion, the field being used for smoothing.

An interesting feature of the chassis is the mains voltage adjustment. A rotating paxolin disc with a small window reveals the appropriate mains voltage, and also serves as a guide for the insertion of a fuse plug into the correct socket.

The cabinet is panelled in walnut and bird's eye maple, and conforms in general design to the accepted modern style. A new note is struck, however, in the design of the control knobs, which are conical in shape and provided with chromium-plated metal rims. The receiver's principal claims to attention, however, are first and foremost its exceptionally good performance in the matter of range and selectivity, and, secondly, the fact that the range of entertainment value has been considerably widened by the addition of a short-wave range without adding excessively to the cost.

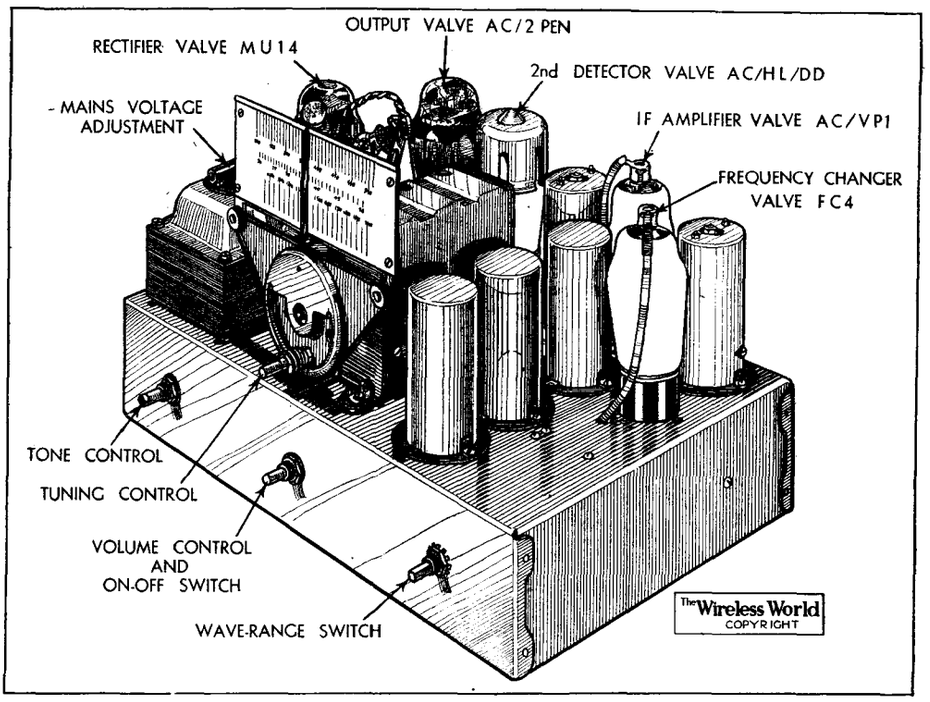

The horizontal tuning scale is calibrated on the short- as well as on the medium- and long-wave ranges. An interesting mechanical detail is the fool-proof mains voltage adjustment.

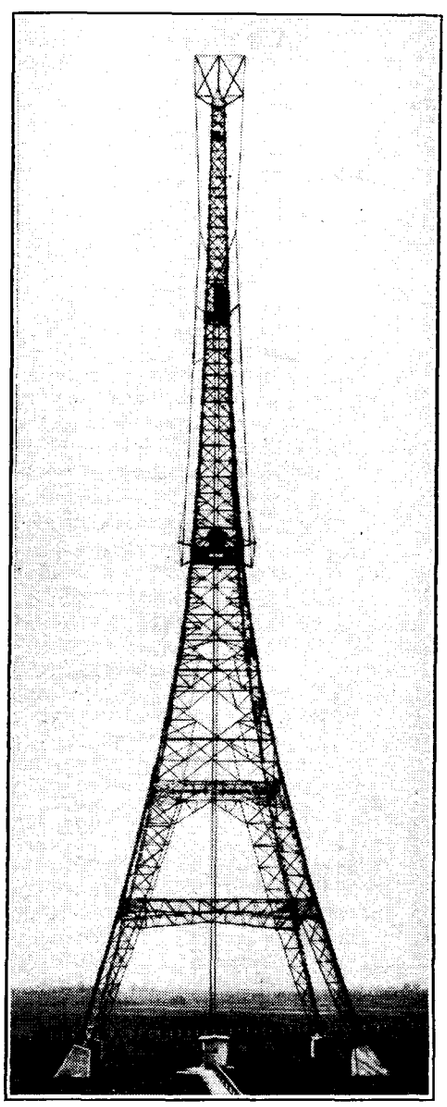

Vertical dipole aerial on the single wooden mast of the Munich broadcast station.

New Anti-fading Aerial

Munich's Double Dipole Arrangment

GERMANY believes in attacking the problem of fading at the source of transmission. Several stations have been equipped with anti-fading aerials, and the latest is the Munich transmitter, which last year had its power raised from 60 to 100 kilowatts. In this case the "anti-near-fading" aerial is an entirely new type. The familiar single wooden mast construction, which is also employed by Telefunken, has been retained, but the constructors, Lorenz of Berlin, are employing a vertical dipole aerial.

This is supported by wooden masts 163 metres in height. The aerial tuning hut is situated 120 metres from the ground, and feeds both sections of the dipole, which has been doubled to obtain more uniform radiation.

In the photograph, which clearly shows the arrangement of the aerial, three small huts can be seen, the highest being for aerial tuning purposes. Below it, at 80 metres from the ground, is the electrical equipment to prevent the power radiated from the aerial from reacting on the feeder line. The small house on the ground contains the aerial transformer equipment.

A. A. G.

New Car Radio Set

British-made "Austin" Receiver now in Production.

THERE are two schools of thought with regard to car radio sets. At one end of the scale we have the multiple-unit set, difficult to install but for which room can almost always be found; at the other, the single-unit directly controlled set which is easy to fit but which requires a good deal of space in an accessible position.

Between these extremes various compromises are possible, and a particularly happy one seems to have been chosen for the new "Austin" car set produced by the City Accumulator Co., Ltd., 18-20, Norman's Buildings, Central Street, London, E.C.1. The receiver, speaker, and a rotary HT generator are built into a single unit for fitting on the dash, and a remote-control unit is mounted on the steering column. Installation will therefore be easy, and, to judge from a short test of one of the first production models, all the problems of this highly specialised branch of reception have been satisfactorily overcome. Sensitivity is remarkable and is sufficient to ensure a good choice of stations even with the most rudimentary of aerials.

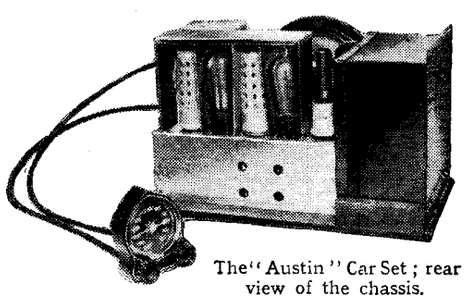

The "Austin" Car Set; rear view of the chassis.

Short Waves and the Amateur

A Receiver for the Beginner

By G2TD and G5KU

FOR those making an incursion into the technique of short-wave listening one cannot do better than advise them to build a simple straight type of receiver.

In view of the number of times such a set has been described elsewhere it would appear to be redundant to repeat the instructions of other pundits, and yet a few timely hints may be of assistance and enlightenment.

A two-valve battery receiver will be described for operation from a two-volt accumulator and a maximum HT voltage of 120. It consists of a leaky grid triode detector followed by one stage of LF amplification feeding a pair of headphones, and will operate from 10 metres upwards, even to the long wave band if suitable coils are provided.

Dealing first with the circuit in Fig. 1 it will be noticed that quite a conventional arrangement is used. The signal is tuned-in by the circuit L1, C1, which must have reasonably low loss characteristics. By this one does not imply that porcelain or quartz forms of insulation are essential, since the effect of reaction neutralises coil losses unless they are very high.

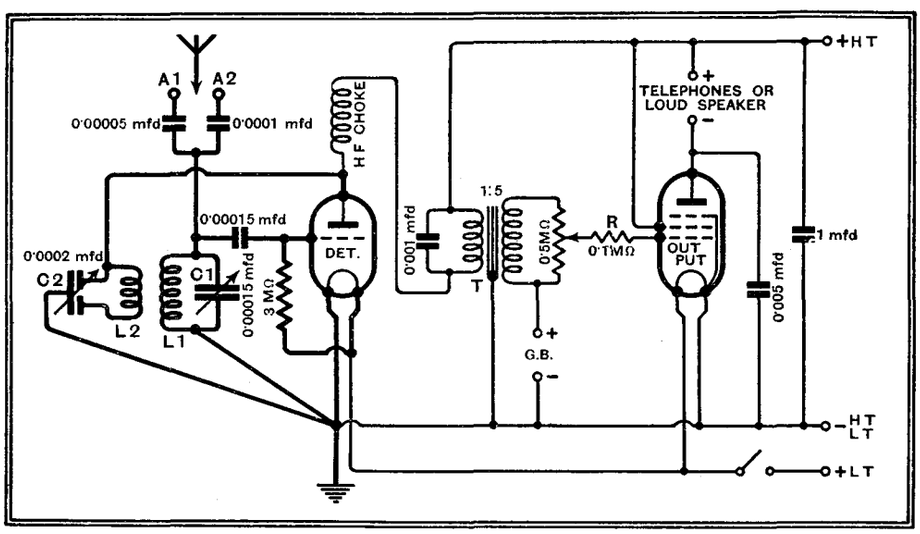

Fig. 1.—The circuit diagram of a simple two-valve short-wave set.

When coils and condensers are used as resonators in amplifying circuits which are not reactive, then the use of low-loss ceramic or siliceous materials is essential, always providing the valve to which they are coupled is substantially loss-free.

Reverting to Fig. 1, the signal voltage developed across L1, C1 is applied to the conventional leaky grid detector, which not only detects and amplifies, but reacts energy back into the tuned circuit, and neutralises losses therein. This feed-back is brought about by the circuit L2, C2.

The use of a differential condenser assists in maintaining the correct detector load, independent of the reaction condenser setting, giving a much more uniform detector efficiency than is possible with the single condenser method. This condenser should be air-spaced, or reasonably loss-free, and may be obtained from several well-known manufacturers.

HF Filter

The rectified signal is stepped up by the 1/5 transformer T, which is shunted by a capacity whose low reactance at radio frequencies allows the by-pass of any remaining high-frequency component in the detector's anode circuit, after rectification has occurred.

As a further precaution, the resistance R is also included, in series with the grid of the output pentode.

It will be noticed that the aerial may be connected to one of two positions, and thereby alter the added input capacity to the receiver due to the aerial. This arrangement is of assistance at the lower wavelengths of, say, 10-30 metres, where the aerial may be connected to A1. For higher wavelengths A2 may be found correct.

Coils are not expensive to buy, and it would well behove the tyro to purchase them from any reputable short-wave component manufacturer, when three coils will be found ample to cover from 10 to 80 metres. The variable condenser C1 should be of the midget type, specially designed for short-wave receivers, and should be provided with a high ratio slow drive and good open scale of substantial area and radius.

Care should be exercised in the purchase of the HF choke, which must be expressly designed for this purpose and have a low-self capacity.

For the valves a high-impedance triode of the type designed for resistance-capacity coupling will be suitable, providing it is of non-microphonic design, and preferably not metallised. The output pentode may be any low-current consumption type, and should be operated in a well-biased condition, remembering that few signals it passes will exceed the 10-milliwatt level without the phones becoming uncomfortable.

The layout of the receiver will call for normal methods, but the constructor is reminded that all wires at high-frequency potential, shown in heavy line, must be short and cleanly soldered, while the branched form of earth wiring should also be followed in the wiring of the components. Provided such precautions are taken, there is no reason why the receiver should fail to operate at the opening ceremony, and should be capable of bringing signals from broadcast phone and C.W. transmitters all over the world. As a final word, select a good pair of light headphones of 2,000 to 8,000 ohms, connecting them correctly, as indicated in the diagram, to prevent demagnetisation.

DX Notes

Now that the winter is well advanced, the following conditions can be relied on for 20 metres. At noon general U.S.A. reception with all districts, except 6 and 7. Also, ZL and VK are possible, although on the decline. Later, at about 4 p.m., reception of W6 and W7 stations at good level, with occasionally the farther Canadian districts. After 4.30 p.m. a general fade-out occurs, when, possibly with good results, a few American districts can still be worked, but not later than 7 p.m. Between 4 p.m. and 7 p.m. South African signals are good, and usually the only ones heard. Until midnight the band is apparently dead, but at this time occasional South American reception is possible, though little can be done until early morning, when at 8 to 10 a.m. the level improves, and ZL and VK signals are also good. After this, the Americans begin to pour in, until the crowded late noon condition is reached.

The Physical Society's Exhibition

THE twenty-fifth annual exhibition of scientific instruments and apparatus was held at the Imperial College of Science and Technology, South Kensington, on January 1st to 3rd.

An illustrated report describing the exhibits which it is considered to be of interest to our readers will be included in next week's issue.

Foundations of Wireless

Part VIII.—The Series-tuned Circuit

By A. L. M. SOWERBY, M.Sc.

THE reader who has followed this series of articles will now be able to apply the knowledge he has gained to everyday problems of wireless reception, and to appreciate how a weak incoming signal builds up a relatively large voltage in a circuit tuned to its frequency

(Continued from page 22 of January 4th issue)

IN the last part of this series we saw that when an alternating current passes in succession through an inductance and a condenser the voltages developed across the two components are at every separate instant in opposition. The total voltage across the two of them, therefore, is the simple difference of the individual voltages. It follows that the combined reactance of the two is the difference of the individual reactances.

We have already seen that the reactance of a condenser falls and that of an inductance rises as the frequency of the current supplied to them is increased. It is therefore going to be interesting to study the behaviour of a circuit such as that of Fig. 37 over a range of frequencies. If we take the values of L, C, and r stated under the diagram, we shall have a unit which combines the advantages of round numbers with a reasonably close approximation to a practical case.

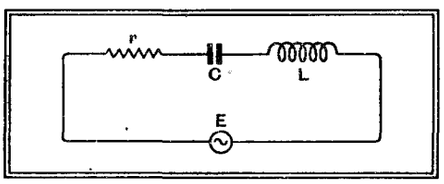

Fig. 37.—Series-tuned circuit : if L = 200μH, C = 200μμF, r = 10 ohms, the magnification will be 100 at resonance. (See Fig. 38.)

The reactance of the condenser is $1/2\pi fC$ ohms, and that of the coil $2\pi fL$ ohms; the values of these for various frequencies up to 1,800 kc. per sec. are plotted as curves in Fig. 38. The most striking feature of this diagram is that at one particular frequency, about 800 kc/s, the coil and the condenser have equal reactances, each amounting then to about 1,000 ohms.

At this frequency the total reactance, being the difference of the two separate reactances, is zero; at every instant the help or hindrance to the flow of current due to the coil is exactly counterbalanced by the hindrance or help given by the condenser. Alternatively expressed, the voltage developed across the one is equal to the voltage across the other; and since they are, as always, in opposition, the two voltages cancel out exactly. The circuit of Fig. 37 would, therefore, be unaltered, so far as concerns its behaviour *as a whole* to a voltage of this particular frequency, by the complete removal from it of both L and C. This, leaving only r, would result in the flow of a current equal to E/r.

Let us assume a voltage not unlikely in broadcast reception, and see what happens when E = 5 millivolts. The current at 800 kc/s will then be 5/10 = 0.5 milliamp., and this current will flow, not through r only, but through L and C as well. Each of these has a reactance of 1,000 ohms at this frequency; the potential across each of them will therefore be 0.5 × 1,000 = 500 mV., which is just one hundred times the voltage E of the generator to which the flow of current is due.

That so small a voltage should give rise to two such large voltages elsewhere in the circuit is one of the queer paradoxes of alternating currents. If the foregoing paragraphs have not made clear the possibility of the apparent absurdity, the curves of Fig. 35, modified to make the two voltages equal, will give the complete picture of the large individual voltages in opposite phase.

In the particular case we have discussed, the voltage across the coil (or across the condenser) is one hundred times that of the generator. This ratio is called the *magnification* of the circuit, and is generally denoted by the letter m.

The voltage across the coil being $2\pi fL$ times the current through it, and this current being E/r, the magnification of the circuit is $2\pi fL/r$. At any given frequency, magnification depends solely on L/r, the ratio of the inductance of the coil to the resistance of the circuit.

If r is made very small, the current round the circuit for the frequency for which the reactances of L and C are equal will be correspondingly large. In the theoretical case of zero resistance, the circuit would provide, at that one frequency, a complete short-circuit to the generator. Huge currents would flow, and the voltages on C and L would in consequence be enormous.

To obtain high magnification of the received signal (for which the generator of Fig. 37 stands), it is thus desirable to keep the resistance of the circuit as low as possible.

To voltages of frequencies other than that for which coil and condenser have equal reactance, the impedance of the circuit as a whole is not equal to r alone, but is increased by the residual reactance. At 1,250 kc/s, for example, Fig. 38 shows that the individual reactances are 1,570 and 636 ohms respectively, leaving a total reactance of 934 ohms. Compared with this, the resistance is negligible, so that the current, for the same driving voltage of 5 mV., will be 5/934 mA, or, roughly, 5 microamps. This is approximately one-hundredth of the current at 800 kc/s.

By extending this calculation to a number of different frequencies we could plot the current in the circuit, or the voltage developed across the coil, against frequency. The curve so obtained is called a *resonance-curve*; one is shown in Fig. 39. The vertical scale shows the voltage developed across the coil for an injected voltage of 1.32 volts; at 1,000 kc/s the frequency at which $X_L = X_C$, the voltage across the coil rises to 100 volts, from which we conclude that $m = 100/1.32 = 75$. Without going into details, a glance at the shape of the curve is enough to show that the response of the circuit is enormously greater to voltages at 1,000 kc/s than to voltages of any other frequency; the circuit is said to be *tuned* to, or to *resonate* to, 1,000 kc/s.

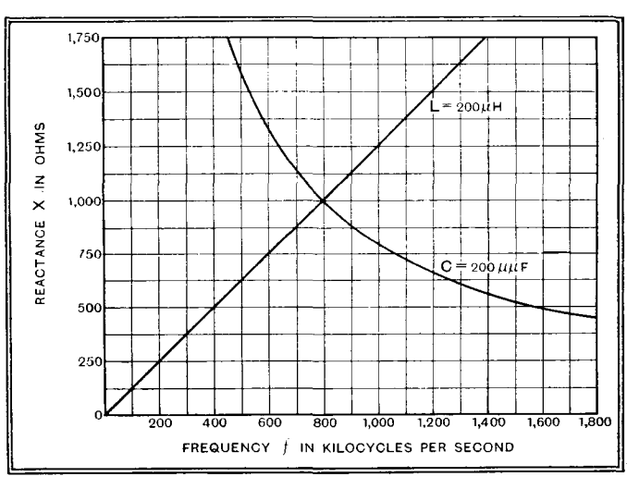

Fig. 38.—Reactances of the coil and condenser of Fig. 37 plotted against frequency. Note that 800 kc/s, where the curves intersect, is the frequency of resonance.

The principle on which a receiver is tuned is now beginning to be evident; by adjusting the values of L or C in a circuit such as that under discussion it can

Foundations of Wireless—

be made to resonate to any desired frequency. Any signal-voltages received from the aerial at that frequency will receive preferential amplification, and the desired transmitter, differentiated from the rest by the frequency of the wave that it emits, will be heard to the comparative exclusion of the others.

We have said "comparative exclusion" because it is found that the *selectivity* of a single tuned circuit is seldom enough to provide sufficient separation between stations, so that two, three, or even more are used, all being tuned together by a single knob. The increase of selectivity obtained by multiplying circuits is very

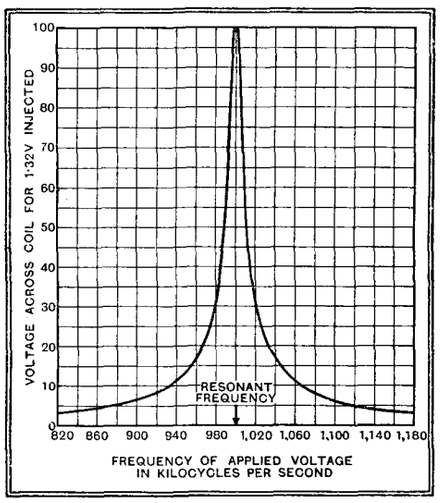

Fig. 39.—Voltage plotted against frequency for the circuit of Fig. 37, in which L = 180μH, C = 141μμF, r = 15 ohms, V = 1.32 volts.

marked indeed; with a single circuit of the constants of Fig. 39 a station is reduced to one-twentieth of its possible strength by tuning away from it by 120 kc/s (5 v. response on Fig. 39 at $f = 880$ or 1,120 kc/s). Adding a second tuned circuit to select from the signals passed by the first leaves only one-twentieth of this twentieth—i.e., one four-hundredth. A third circuit leaves one-twentieth of this again—that is, one eight-thousandth. This last figure represents a set of about the minimum selectivity acceptable for general reception; it follows that a receiver requires a minimum of three tuned circuits except in cases where means are provided for increasing the sharpness of tuning beyond that given by the unaided circuit.

The sharpness with which a circuit tunes depends entirely upon its magnification, as comparisons of the two curves of Fig. 40 will show. These are plotted to the same maximum height, thereby helping comparisons of selectivity while obscuring the fact that a circuit of $m = 200$ gives a louder signal (more volts at resonance) than one for which $m = 75$. In Fig. 41 the curves are redrawn to show the relative response of the two circuits to the same applied voltage; the more selective circuit is also, as we have seen, the more efficient.

The average tuning condenser has a maximum capacity of about 530 μμF., while the minimum capacity, dependent

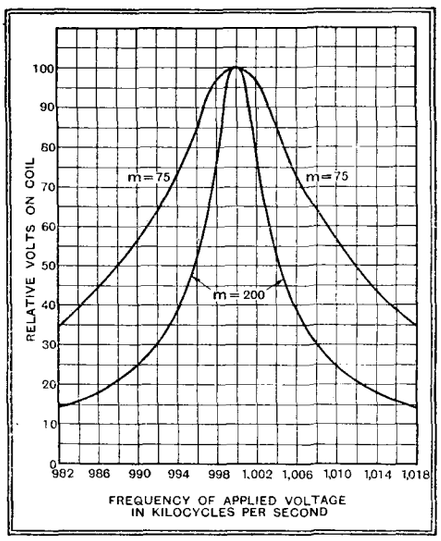

Fig. 40.—Resonance curves of two tuned circuits of different magnifications (m) at 1,000 kc/s. The greater selectivity of the circuit of higher magnification is very apparent. Note that E (Fig. 37) is 1.32 volts for coil m = 75, but only 0.5 v. for coil m = 200.

more on the coil and the valves connected to it than upon the condenser, is generally about 70 μμF. in a modern set. This leads, as we shall see in a moment, to the choice of about 160 μH. for the inductance of the coil with which the condenser is to be associated for tuning over the medium-wave band (200 – 550 metres; 1,500 – 545 kc/s).

A coil of this inductance has a reactance of 1,510Ω at 1,500 kc/s, and at this frequency the same reactance requires a capacity of 70 μμF. This combination, therefore, tunes to 1,500 kc/s, as indicated by the intersection of the curves

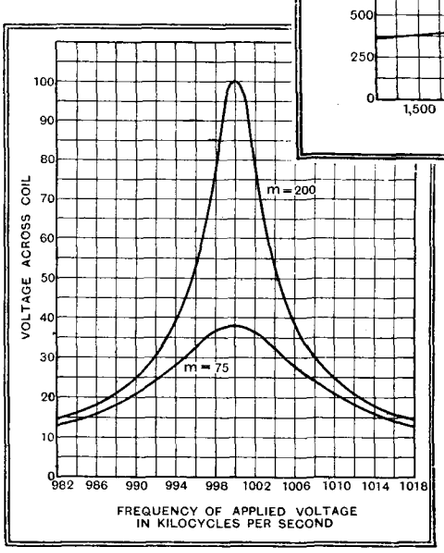

Fig. 41.—Voltages on two different coils for the same injected voltage (E = 0.5 V). Note greater response, as well as higher selectivity (Fig. 40), of coil of higher m.

at A in Fig. 42. Double this capacity would give the same reactance at 750 kc/s, and one might too hastily conclude that to tune the coil to this lower frequency would necessitate increasing the capacity to 140 μμF. Reference to the line "L = 160 μH" will show up the rather evident flaw in this reasoning—the reactance of the coil has dropped to half as the result of halving the frequency, and to catch up with this change in coil-reactance the capacity has to be doubled again, making 280 μμF. The point D, where the reactance-curve for this capacity cuts the line representing the reactance of the coil, lies at 750 kc on the frequency scale, showing that this combination tunes to this frequency.

Since we have to increase the capacity four times to tune a coil to half the frequency, we conclude that the frequency depends on the square root of the capacity, i.e., that $f \propto 1\sqrt{C}$ [*see Note*], or $\lambda \propto \sqrt{C}$. For the usual tuning condenser, running from 70 to 530 μμF. total capacity, the ratio of maximum to minimum capacity is 530/70 = 7.57. The ratio of maximum to minimum frequency is the square root of this, or 2.75. Any band of frequencies with this range of maximum to minimum can be covered by one swing of the condenser, the exact values of the frequencies depending on the inductance chosen for the coil. As Fig. 42 shows, a coil of L = 160μH. sets the range at 1,500 to 545 kc/s, while, by making

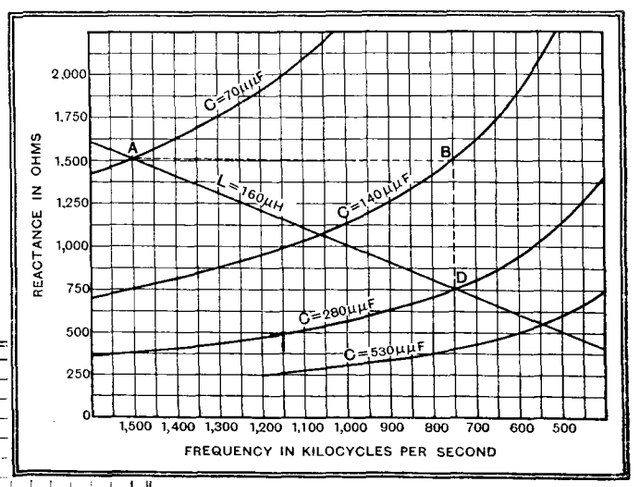

Fig. 42.—Curves showing reactances at various frequencies for a coil of which L = 160μH, and several different values of condenser. At points of intersection, the combination of L and C involved tune to the indicated frequency.

L = 2,350 μH. the long-wave band, 392 to 143 kc/s, or 765 to 2,100 metres, could be covered. With a small inductance suitable for the short waves we could tune from 10 to 27.5 metres.

If we re-examine the line ABD of Fig. 42 we can readily trace the effect of changing inductance. When we found that

NOTE.—This sign "∝" (varies as) means that the two quantities are proportional, one automatically halving or doubling if we halve or double the other, while leaving all other determining factors (value of L, etc.) unchanged.

Foundations of Wireless—

doubling the capacity (from 70 to 140 $\mu\mu$F.) did not result in tuning the coil to 750 kc/s, we could have doubled the inductance, lifting the line for the reactance of L from D to B, instead of doubling the capacity and lowering the curve for the reactance of C from B to D. If we can thus double either L or C indifferently and still obtain the same result, clearly it is only their *product* that matters, and we can now write

$$f \propto 1\sqrt{LC},$$

$$\text{or } \lambda \propto \sqrt{LC}.$$

This can very readily be proved mathematically from facts already in our possession. If the reactances of coil and condenser are equal, $2\pi fL$ must equal $1/2\pi fC$, these being the reactances in question. From this, by a little rearrangement, we get the important relationship, $f = 1/2\pi\sqrt{LC}$, the units being cycles per second, with L and C in henrys and farads. If we prefer our answer in terms of wavelength, we can substitute for f its equivalent $300{,}000{,}000/\lambda$, where λ is the wavelength in metres. This leads to the well-known formula $\lambda = 1{,}885\sqrt{LC}$, where the figure 1,885 includes all numerical constants, and is made a convenient number by taking L in *micro*henrys and C in *micro*farads.

It is quite unconstitutional thus to depart from fundamental units, but it is so convenient at times that it is often done. Formulæ containing any numerical constant (other than 2π, which is itself fundamental) should be scrutinised carefully to see whether odd-sized units enter into their composition. For formulæ without such constants, standard units may safely be assumed.

Letters to the Editor

The Editor does not hold himself responsible for the opinions of his correspondents

Developing the Battery Receiver

MR. W. T. COCKING, in his article, "Developing the Battery Receiver," makes some very misleading statements with regard to the reproduction of the lower audible frequencies. His general argument holds, in that it is foolish to waste power in amplifying frequencies which are not going to be reproduced as *audible* notes. But his insinuation that it requires three watts output to make reproduction below 100 c/s worth while is still more foolish.

My output valve is the P.M.22C, rated at 1.1 watts for 150 v. on the anode. I am using this at 120 v., where the rated output certainly could not exceed 0.7 watt, and am obtaining as a result, through a W.B. P.M.2 speaker, a bass response which definitely goes down to 50 c/s and is *not* due to false resonance, etc., but is a definite bass.

I am speaking, not without knowledge, but as a musician and a technician who has spent much time studying and experimenting with acoustics in various ways.

DAN. W. THOMSON.

Dunfermline.

MR. THOMSON'S criticism of the statement in my article "Developing the Battery Receiver" does not convince me that it is in any way misleading. I do not say that it is impossible to obtain an audible response at 50 c/s with a small output stage, for the efficiency of the loud speaker at this frequency is obviously at least as important as power output. When the perfect loud speaker is developed, we shall obtain as great volume from an economical battery receiver as we do now with heavy duty mains-operated apparatus.

I maintain that with a loud speaker of average efficiency and frequency characteristic, used with the usual small output transformer and baffle of moderate dimensions, an output of much more than 1 watt is necessary if a note of 50 c/s is to be reproduced at any useful intensity, and this presupposes that the speaker is capable of giving an output at this frequency.

Few people realise how deep a pure note of 50 c/s sounds, and most believe it to be of the order of the hum sometimes present in a mains-operated receiver. Actually, the hum is nearly always 100 c/s with components of higher frequency, so that a 50 c/s note is one octave lower. For the correct reproduction of a 50 c/s note quite a large output is needed, a very good loud speaker, a high inductance output transformer with a large core, and a very large baffle.

W. T. COCKING.

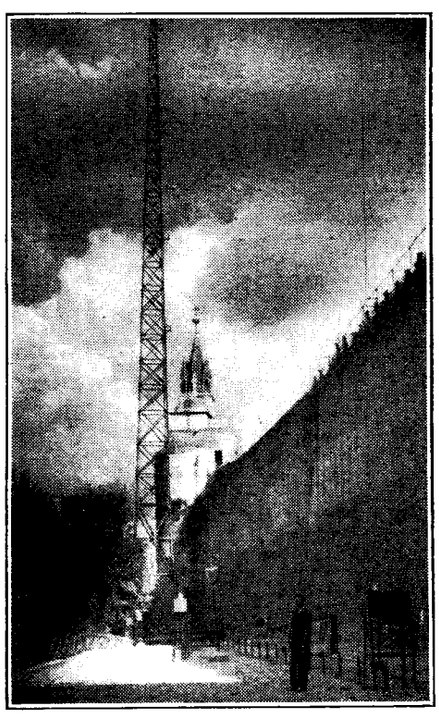

RADIO VATICAN photographed from an unusual viewpoint, beside the ancient Vatican City walls. The station, using the call-sign HVJ, transmits daily on 50.27 metres (19.00 to 19.15) and 19.84 metres (10.00 to 10.15).

National Programme on North Regional

I RECENTLY spent an interesting and enjoyable evening listening to the broadcast of Berlioz' "Faust" from North Regional. Some fading certainly occurred, but not too badly to spoil things.

However, one rather odd thing happened, and this persisted right through the performance. I found that—only during strong periods of signal—I had a kind of background of English speech as a general rule, and this appeared to be probably the English National programme as a background.

To me it seemed very odd indeed, and I am wondering if some kind of parasitic trouble is being experienced at the Northern transmitter on the lines of that found in London some time ago.

S. JESSOP.

London, S.W.11.

Hints to Manufacturers

HERE is my criticism of various makes of sets which you may like to make use of:—

Having, say, only a few pounds to spend on a set, it is a great satisfaction to be able to say I should never buy any radio-gramophone which made me get out of my easy chair to lift up the top and stoop down after dinner to be able to work it. The higher the price the greater the satisfaction of saying you would not own it.

Seeing the one set I require I find the controls are just on the side which would prevent me buying it according to the position it would have to take up in my room.

I should never buy a set with the controls at the top, as this means getting up every time I want to work it, whilst with knobs at the bottom front of the set I can conveniently work it from my easy chair.

As the most important thing about the outside of a wireless set is to be able easily to see at a glance what station you are getting, and how to get what you want easily, it beats me why the majority of sets make this so insignificant or difficult; from this point of view there is only one maker who really realises the importance of this subject, namely, Ekco, but the Ekco set I should like to have has the controls in the wrong place for my convenience, hence I stick to my 50s. battery set.

Plymouth. H. PRIDHAM.

Droitwich: A French Opinion

IT may be of interest to you and your readers to know that in this little town —forty miles north of Lyons—Droitwich is on the whole very satisfactory. It is sometimes possible to hear it in day-time, and in the evening the audition is generally very clear and strong. I have not noted any perceptible amount of fading.

Yet it can't be denied that the German transmitter in Zeesen is received much more strongly. But then the old Daventry transmitter was practically inaudible here, and I rejoice at having a good daily chance of listening to British programmes.

On the whole, however, I find that general conditions are not quite so good this winter as they were last winter. This is a general remark and applies to all medium-wave English transmitters. For instance, last winter I was always sure to tune in London at 5.15 p.m. for the Children's Hour; while now there are days in which no English transmission on medium-waves can be relied on before 7 p.m.

My set is an AC 8-valve superhet, and I can tune in about 95-100 European stations of an evening.

Wishing all success to the "W.W."

M. J. MEUNIER.

Bourg (Ain), France.

Single-span

I WISH to thank you for the recent issues of *The Wireless World* containing the suggestions for the New Single-Span Battery Four. After reading the first two of Mr. Cocking's articles I altered my aerial filter in my Battery Single-Span Receiver. The improvement was immense—I no longer need a wavetrap, volume on the long waves is increased quite 50 per cent., quality of reproduction is very fine. The quality and freedom from background are simply great.

Again thanking you for the aerial filter. The battery edition of the Single-Span Receiver is a thumping success, and I am well satisfied. W. B.

Liverpool, 19.

Output Transformers

WITH reference to the article in *The Wireless World* of Dec. 14th, "Low-frequency Coupling Devices," it is surely a fallacy to suggest that the output transformer of a Class "B" or QPP stage works under more arduous conditions than the corresponding Class "A" push-pull output transformer. For any given signal output demands a certain voltage in the secondary, and this in turn requires a fixed change of flux in the core, regardless of whether the primary is fed by a Class "A" or "B" push-pull stage. In both cases the steady flux due to direct current is zero by balancing, but in Class "B" it happens that the two no-signal currents which balance are each small.

To take a concrete example, suppose an output transformer has a total of 2N turns in its primary and is fed from an output stage delivering 40 mA. peak AC. Then in a Class "B" or QPP stage the primary currents at the peak of the wave will be 40 mA. in one half primary and 0 in the other, giving a resultant magnetising effect of 40N mA.-turns. In a Class "A" push-pull stage, on the other hand, there will be a no-signal current of, say, 25 mA. from each valve, which balances out between the two windings; at the peak of a wave one valve will pass 45 mA. and the other 5 mA., giving a resulting magnetising effect of (45-5)N mA.-turns—i.e., identical with the 40N mA.-turns in the Class "B" or QPP stage.

But one must also allow for the effect of the secondary current, whose magnetic field is opposed to that of the primary, so that the actual magnetic flux in the core at the peak of an alternating-current wave is less than it would be for the corresponding magnitude of direct current unaccompanied by secondary current. This effect appears in the fact that if a power transformer be run from a constant-voltage source, the magnetic flux density in the core is practically independent of any variation of primary current caused by variation of load on the secondary, so that one cannot determine flux density on AC from primary current alone. The flux density in the core actually corresponds to the "magnetising current"—i.e., the current which flows in the primary when the secondary is on open circuit. If the primary reactance is twice the load resistance, the magnetising current will be only one-third of the total primary current; so that if the primary AC has a peak value of 40 mA., the maximum magnetisation of the core will then be only the same as for a direct current of 13.3 mA., and, as explained above, this represents the whole magnetising effect in all push-pull stages, whether Class "A" or Class "B" (the latter including QPP). D. A. BELL.

Oxford.

Extension Speakers

ON reading through the issue of December 7th of *The Wireless World*, I notice in the article headed "The Extension Loud Speaker," by Cathode Ray, that the name of Regentone figures amongst a list of manufacturers making provision for the fitting of an extra loud speaker across the primary of the output transformer.

It is true that this practice was adopted last season, but in view of the fact that it leads to several possible troubles it has been abandoned this season, and the practice of connecting this extra speaker to the secondary of the output transformer has been adopted throughout, with the added safeguard of earthing one side.

At the end of the article an objection is raised to connecting the external speaker to the secondary on the grounds that it is exceedingly difficult to find the instruction book supplied with the receiver.

This raises a difficult problem with which the manufacturer has to contend. It seems that every person who has to deal with a commercially made receiver has a rooted objection to reading an instruction book. This is completely illogical and causes a lot of trouble with both parties concerned. It is therefore a practice to be deprecated.

For Regentone, Ltd.,

H. A. BROKE,

Chief Engineer.

"WIRELESS WORLD" SETS

A READER writes to us that he would welcome reports from other readers in different locations on experiences with *Wireless World* receivers, in particular, the "Single-Span" AC model. Reports to be published in the correspondence columns.—ED.

COMMENTARIES WITHOUT CABLES

New Portable "O.B." Equipment in Germany

THE tyranny of the trailing cable has long been irksome to German "O.B." engineers, and for some time the broadcasting authorities have bent their attention on the development of portable short-wave transmitters which would obviate the tangible link between the commentator and the mobile recording van.

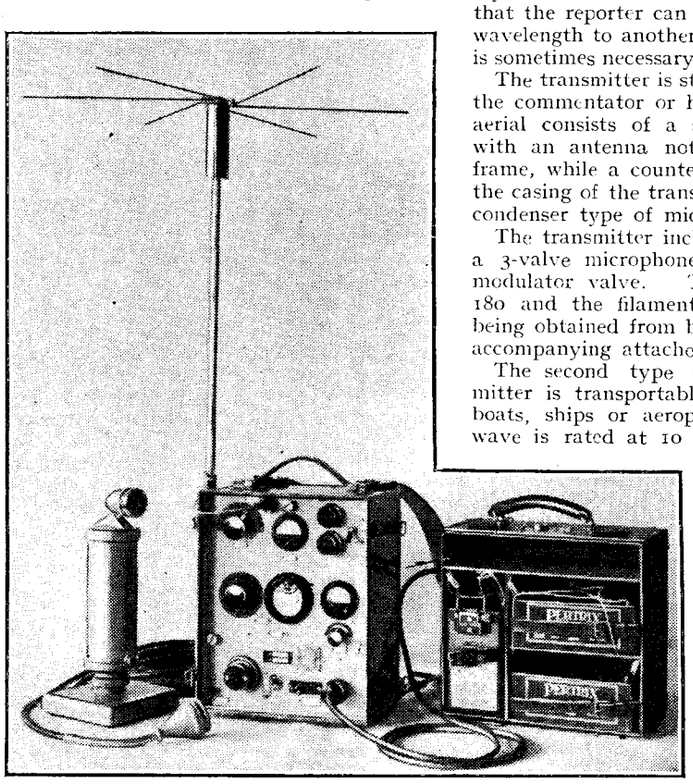

THE "COMPLEAT COMMENTATOR" in Germany is equipped with this new 0.6-watt short-wave transmitter, enabling him to range the country while dispensing with cable connections to the "O.B." van.

Two standard types of short-wave apparatus have now been evolved which give quality good enough for the exacting needs of broadcasting.

The more interesting, perhaps, is the 0.6-watt portable type illustrated on this page. It is built to cover a range of from 1 to 1½ miles. This limitation to a comparatively short working distance is necessary in order that quality may be maintained. The transmitter has a waverange of from 48 to 55 metres and is fitted with two quartz crystals, each of a different frequency, so that the reporter can switch over from one wavelength to another without delay. This is sometimes necessary to avoid interference.

The transmitter is strapped to the back of the commentator or his companion. The aerial consists of a short aluminium rod with an antenna not unlike an umbrella frame, while a counterpoise is provided by the casing of the transmitter. The ordinary condenser type of microphone is used.

The transmitter includes two HF valves, a 3-valve microphone amplifier and one modulator valve. The anode voltage is 180 and the filament voltage 4, current being obtained from batteries housed in an accompanying attache case.

The second type of short-wave transmitter is transportable, for use on motor boats, ships or aeroplanes. The carrier wave is rated at 10 watts. The 400-volt anode current is supplied by a small converter set fed from an accumulator.

Dr. Nestel, of the R.R.G. laboratories, who will be remembered in connection with the anode current economy circuit for the battery type of "People's Receiver," is largely responsible for the design of the transmitters. These "O.B." transmitters are in practically daily use and very soon every one of the ten Regional stations in Germany will be provided with a complete set. At present there are three or four in use which are lent to the various centres as required. A. A. G.

Readers' Problems

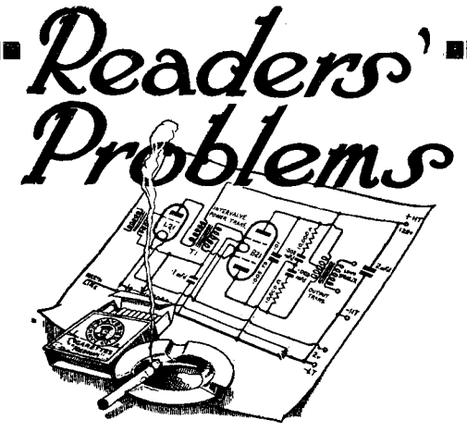

THESE columns are reserved for the publication of matter of general interest arising out of problems submitted by our readers
Readers requiring an individual reply to their technical questions by post are referred to "The Wireless World" Information Bureau, of which brief particulars, with the fee charged, are to be found at the foot of this page.

Trial and Error

A CORRESPONDENT who wishes to wind a coil of 180 microhenrys, for use in conjunction with others of that inductive value in a gang-tuned receiver, asks for information on the design of the winding. He is apparently under the impression that it is possible to calculate the required winding with such a high degree of accuracy that it will be correctly matched with respect to the existing coils in the receiver.

Such accuracy is unattainable in practice, and, however carefully the winding be designed, it will be necessary to match it finally to the other coils by the method of trial and error. It is quite possible, however, to design a winding that will be close enough for a first approximation by using the Abacs published in *The Wireless World* (re-issued as "Radio Data Charts").

Series-parallel Valves

NOW that a variety of valves with special filaments or heaters for different voltages are produced, there is less excuse than formerly for the elaborate series-parallel LT networks that were at one time in vogue.

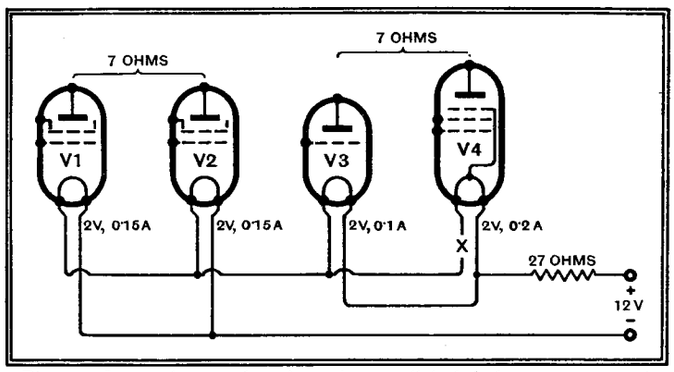

Fig. 1. Low-voltage valves in series-parallel fed from a source of considerably higher voltage.

Occasionally, however, it still becomes necessary to use an unconventional arrangement when planning a receiver to be fed from an unusual source of current. For example, a reader asks us to show him how to wire the following combination of 2-volt valves in the most economical manner possible across a 12-volt accumulator: two valves rated at 0.15 amp., one at 0.1 amp., and one at 0.2 amp.

This combination works very happily into the series-parallel circuit shown in Fig. 1, which represents a practical arrangement, but hardly one complying with our correspondent's requirement that it shall be "safe and dependable in all circumstances." The trouble about all such series-parallel arrangements is that the failure of one filament (or even a temporary interruption in one filament circuit) is liable to result in damage to other valves. As this drawback does not seem to be generally appreciated, it is worth while to explain it at some length.

Referring again to the diagram, we will imagine that the filament circuit of V_4 is temporarily interrupted at the point (X). As a result, the total filament resistance of the parallel group comprising V_3 and V_4 is increased from about 7 ohms to 20 ohms, and the current flowing in the main circuit is reduced from 0.3 amp. to 0.21 amp. Although this current is less than before, the whole of it must now flow through the filament of V_3 (rated at only 0.1 amp.), with the result that this valve will inevitably be damaged by an overload of more than 100 per cent.

It will, therefore, be clear that accidental interruption of filament circuits is to be guarded against when a series-parallel arrangement is used, or when the valves are fed from a source of considerably higher voltage than the combined rating of the various filaments of a parallel system.

Hum *via* the Aerial

THE constructor of a Universal Single-Span Receiver finds that at times hum interference is apparently being picked up by the aerial; at any rate, the noise disappears when the aerial is disconnected from the set.

From his general description of the somewhat unusual effects observed, we are inclined to think that the interference is of a low-frequency nature and that it will almost certainly be eliminated by the simple expedient of connecting an ordinary HF choke between the aerial and earth terminals of the receiver.

Leaky Condensers

IT is asked whether a pair of 4-mfd. condensers rated to work at 200 volts would, if connected in series, be in every way equivalent to a single condenser of 2 mfds. designed to work at 400 volts. The reader who asks this question is particularly concerned with the safe working voltage, as he intends to use the condensers for additional smoothing across a 300-volt HT system, and wishes to provide a fair margin of safety.

If it could be assumed that the insulation resistance of the two condensers were equal, it would be perfectly safe to work them at double their normal voltage when connected in series.

But in practice all condensers, and particularly those with paper dielectric, are more or less leaky, and, what is more to the point, are likely to have unequal leakage resistance. This will mean that when they are connected in series the distribution of the applied voltage will vary in proportion to resistance, and so the strain will not be equally distributed.

A consideration of Fig. 2, which illustrates the practical problem raised by our querist, will make this matter clear. For the sake of illustration it is assumed that the first of the two condensers C1 has a resistance of 20 megohms, while that of C2 is 100 megohms. In consequence, the input of 300 volts will be distributed in the proportion of 20 : 100; the pressures existing will be 50 and 250 volts respectively across C1 and C2, and so the latter will be overloaded. In spite of this, the use of two low voltage condensers in series across a high voltage source is practicable, but a simple precaution must be observed. To equalise the resistance values it is recommended that a resistor of considerably lower ohmic value than the leakage resistance likely to be met with should be connected in parallel with each condenser; in practice, values of about 1 megohm will be satisfactory.

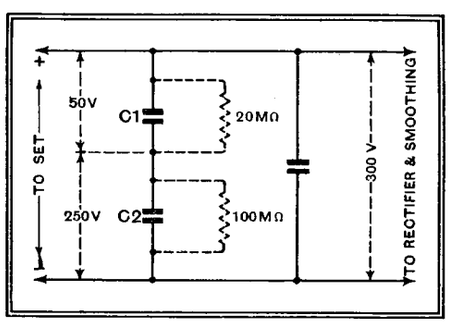

Fig. 2. Distribution of voltage across condensers in series: leakage represented by resistances drawn in dotted lines.

Aerial Filters

IT should be made clear that the improved type of aerial filter for Single-Span receivers, as described in our issue of November 16th, 1934, is applicable to all sets embodying the Single-Span principle of tuning.

The Wireless World INFORMATION BUREAU

THE service is intended primarily for readers meeting with difficulties in connection with receivers described in *The Wireless World*, or those of commercial design which from time to time are reviewed in the pages of *The Wireless World*. Every endeavour will be made to deal with queries on all wireless matters, provided that they are of such a nature that they can be dealt with satisfactorily in a letter.

Communications should be by letter to *The Wireless World* Information Bureau, Dorset House, Stamford Street, London, S.E.1, and must be accompanied by a remittance of 5s. to cover the cost of the service.

Personal interviews are not given by the technical staff, nor can technical enquiries be dealt with by telephone.

The Wireless World
THE PRACTICAL RADIO JOURNAL
24th Year of Publication

No. 803. FRIDAY, JANUARY 18TH, 1935. VOL. XXXVI. No. 3.

Proprietors : ILIFFE & SONS LTD.

Editor :
HUGH S. POCOCK.

Editorial,
Advertising and Publishing Offices :
DORSET HOUSE, STAMFORD STREET,
LONDON, S.E.1.

Telephone: Hop. 3333 (50 lines).
Telegrams: "Ethaworld, Watloo, London."

COVENTRY: Hertford Street.
Telegrams: "Autocar, Coventry." Telephone: 5210 Coventry.

BIRMINGHAM:
Guildhall Buildings, Navigation Street, 2.
Telegrams: "Autopress, Birmingham." Telephone: 2971 Midland (4 lines).

MANCHESTER: 260, Deansgate, 3.
Telegrams: "Iliffe, Manchester." Telephone: Blackfriars 4412 (4 lines).

GLASGOW: 26B, Renfield Street, C.2.
Telegrams: "Iliffe, Glasgow." Telephone: Central 4857.

PUBLISHED WEEKLY. ENTERED AS SECOND CLASS MATTER AT NEW YORK, N.Y.

Subscription Rates :
Home, £1 1s. 8d. ; Canada, £1 1s. 8d. ; other countries, £1 3s. 10d. per annum.

As many of the circuits and apparatus described in these pages are covered by patents, readers are advised, before making use of them, to satisfy themselves that they would not be infringing patents.

CONTENTS

	Page
Editorial Comment	51
A New Development in Radio-Frequency Amplifiers	52
The Bulb of Many Uses	55
Hints and Tips	57
Modern Tuning Coils	58
The Question of Safety	62
News of the Week	63
Resistance-coupled Amplifiers	64
Random Radiations	66
Listeners' Guide for the Week	68
New Apparatus Reviewed	70
Broadcast Brevities	71
Letters to the Editor	72
Physical Society's Exhibition	73
Short-waves and the Amateur	75

EDITORIAL COMMENT

Frequency Separation

The Need for a New "Plan"

IN this issue we publish a letter from a reader who, having read the Leader in our issue of January 4th, disagrees with it and makes an interesting defence of the existing plan of wavelength distribution in Europe.

Unfortunately, we find that he has interpreted one sentence in our Leader as meaning that we recommend a frequency separation between transmitters which would enable a band width of 30–13,000 cycles to be put out, whereas no such idea was intended. But, because such a range is not practicable, that is no reason why we should stop so far short of this ideal as our correspondent suggests—for if we have interpreted his views correctly he maintains that we may receive a reasonably strong signal and get reception up to 6,000 cycles fairly free of interference and that reception of the local station "can be *very* nearly perfect."

Whatever arguments may be put forward to the contrary by individuals, we believe that the great majority of listeners, especially in this country, would welcome a change in broadcasting conditions which made possible the radiation of a wider frequency range.

In the Leader in question we touched upon a possible solution to the problem, in the idea of allocating bands of adjacent channels nationally. As long ago as July, 1928, there was published in our monthly journal, *The Wireless Engineer*, a contribution from Mr. S. Lemoine, Chief Engineer of the Swedish Telegraph Administration, on the question of wavelength allocation. We believe that he was the first to propose group allocation of wavelengths. He says, to quote from his article, that "group allocation" of wavelengths would mean that "if a country possesses the right to several frequencies, these frequencies should be allotted in groups of three or four adjacent bands.

"In this there are at least two advantages to be gained: first, the broadcasting organisation in each country will itself become responsible for the frequencies within each band being kept constant, which would be quite easy when the stations are subordinate to one and the same authority. At the same time the work of the international wavelength control would be lessened; and if they fail in their efforts, their own listeners and not, as is now the case, listeners outside the country, who have nothing to do with the matter, will be the sufferers. Secondly, many of the disturbing effects of the space-radiation would be eliminated, since they would come within a considerably broader frequency-band, and thus listeners to their own local stations will not be troubled by it to such an extent as at present."

In terms of broadcasting development in Europe one might expect to find suggestions of 1928 very much out of date, and yet this scheme of "group allocation" seems to have gained added attractions with the lapse of time. In 1928 broadcasting authorities were thinking of reception by the majority in terms of crystal receivers, but objections on the score that receivers cannot separate adjacent channel transmitters in the same area no longer apply.

The argument quoted above, that mutual interference would become a national rather than international concern, is indeed an important point.

The adoption of the principle of Mr. Lemoine's plan of 1928 might well prove a solution of a part, at least, of our problem of to-day.

A New Development in Radio-frequency Amplifiers

A Stable Triode-valve Circuit for Large Output

By F. M. COLEBROOK, B.Sc., D.I.C., A.C.G.I.

DUE to the low grid-anode capacity, screen-grid and HF pentode valves are now practically universal in the HF stages of a receiver. They are not without their drawbacks, however, and it is shown in this article that it is possible to obtain high amplification with a larger undistorted output and a greater degree of stability by using triodes in pairs

IT is well known that the attempt to use triode valves for radio-frequency amplification, with a circuit such as that shown in Fig. 1, is defeated by persistent self-oscillation, which sets in when the two circuits are brought into tune with one another. The cause of this instability is the "feed-back" of energy from the output circuit to the grid circuit through the grid-anode capacitance.

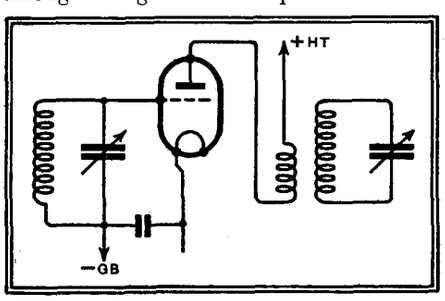

Fig. 1.—Unstable amplifying circuit (triode valve).

Up to a few years ago this difficulty was overcome by various expedients, some ingenious and more or less satisfactory, others frankly desperate and correspondingly unsatisfactory, but, as far as ordinary broadcast receivers are concerned, all these devices were swept away at one stroke by the introduction of the screen-grid tetrode valve. This attacked the trouble right at its source, and sought to get rid of the instability by eliminating the grid-anode capacitance that gave rise to it. The attempt met with a degree of success that completely revolutionised the design of receiving sets, and paved the way for the rapid advance of recent years in sensitivity and selectivity, not to mention the variously qualified kinds of automatic volume control and other refinements of the modern commercial receiver.

In the face of this triumph of the tetrode it may seem almost perversely reactionary even to mention the triode in connection with radio-frequency amplification. The fact remains, nevertheless, that in spite of obvious advantages which are likely to ensure its continued dominance in commercially produced receivers, the use of the screen-grid valve is not the only practicable method of securing stable radio-frequency amplification, and is not even the best method in some cases.

As already stated, the advantages of the tetrode are obvious, and need not be enumerated. Its limitations, however, are not so obvious, and it is necessary to call attention to them in order to indicate the cases in which an alternative triode circuit, described in this article, may actually be preferable in some important respects.

In the first place, the screen-grid valve amplifying circuit is not inherently and unconditionally stable. It is not possible to reduce the grid-anode capacity to zero, and the small residual capacity, even though it may be as little as 0.005 $\mu\mu$F., is sufficient to produce oscillation with really efficient coils. The "goodness" of a tuned circuit, from the point of view of amplification, is measured by the tuned "rejector circuit" impedance of the coil—sometimes referred to as its "dynamic resistance." It is not difficult to realise as high a value as 200,000 ohms or more for this quantity in a good coil. It can be shown theoretically that something like 100,000 ohms is the highest permissible value, consistent with stability, in a screen-grid valve circuit, and in the writer's experience it seems necessary to use even "flatter" circuits than this to be quite sure of stability over the whole tuning range.

Overcoming Instability

The limitation is not a very serious one in practice, but it does restrict the sensitivity and selectivity obtainable in a single stage, and, moreover, it prohibits the effective use of retroaction for the enhancement of selectivity. In the recently developed "single-span" receiver, for example, this difficulty was encountered, and overcome by adopting the distinctive feature of the alternative triode-valve arrangement to be described later.

A more serious, but less obvious, disadvantage of the tetrode is due to the secondary emission from the screen-grid. It does not seem to be generally known that both the voltage factor and the internal resistance of a screen-grid valve vary very greatly with anode voltage as a consequence, apparently, of this secondary emission. The variation does not appear in the characteristics as usually exhibited, because it so happens that the mutual conductance, i.e., the voltage-factor divided by the internal slope resistance, varies very much less than either of its constituent elements. The mutual-conductance characteristic is therefore very deceptive as a guide to the "dynamic" behaviour of the valve, unless the anode-circuit load is small compared with the internal resistance—a condition which is not always as closely fulfilled in practice as it is usually assumed to be.

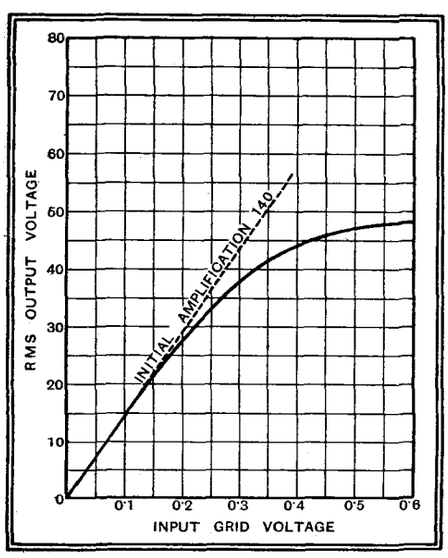

Fig. 2.—Amplification characteristic of a screen-grid valve (two-volt battery type. Anode circuit impedance 180,000 ohms Frequency 1,000 kc/s).

The practical consequence of this variation of the valve "constants" is an appreciable degree of curvature in the amplification characteristic. Fig. 2 shows a typical example of a number of measurements made by the writer with various types of screen-grid valves and variously efficient anode circuits. It will be seen that there is a very appreciable departure from linearity when the output voltage exceeds about 15-20 volts. (In the case illustrated the anode circuit impedance is

A New Development in Radio-frequency Amplifiers—

higher than would normally be used, but with values as low as 40,000 ohms a similar curvature was apparent at similar output voltages, but the amplification was correspondingly smaller.) Although this effect is not likely to be serious in small amplitude operation, it is likely to have undesirable consequences in cases where a tetrode stage is required to supply large output voltages for "linear" detection.

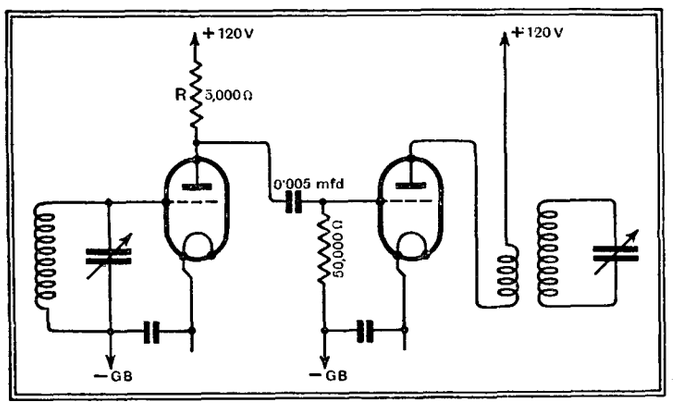

Fig. 3.—Basic circuit of stable triode-valve amplifying stages.

Of these consequences, the most troublesome is that known as cross-modulation, the effect of which is an apparent loss of selectivity, for which there is no practicable remedy. In one case investigated by the writer it was found that the reception of a fairly strong unmodulated carrier wave, in a receiver embodying a tetrode stage, caused a very noticeable increase in the intensity of the interference due to a transmission on a neighbouring waveband. This indicated a very considerable "cross-modulation" effect, for in the absence of it the interference would have been considerably reduced when the strong unmodulated carrier was received, due to the so-called demodulation effect of the detector.

It will not be suggested here that the use of the triode valve in the way to be described later is the only means of evading these undesirable consequences of secondary emission. It is well known that in the output-pentode type of valve the effects on the anode circuit of secondary emission from the outer grid are minimised by incorporating yet one more electrode into the structure—the so-called "suppressor grid." The function of this grid is sometimes rather misleadingly described as being the suppression of secondary emission from the outer or screen grid, but in all probability it is only suppressed in the sense that it is prevented from affecting the anode circuit to any appreciable extent. The success of this device in the output-pentode led to the development of radio-frequency pentodes. Such valves should theoretically be capable of handling larger output voltages than the tetrode, but the writer has no exact information on the point based on his own measurements, and is not aware of any published data. There is, in any case, no obvious reason to suppose that the other limitation of the screened valve, i.e., the stability limitation, would be materially affected by the inclusion of the additional electrode.

Briefly, therefore, the limitations to screen-grid valve amplification are (a) instability if very efficient coils are used, and (b) unsuitability for operation at large output amplitudes, except, possibly, in the case of the pentode type of screen-grid valve.

For the triode-valve arrangement, now to be described, can be claimed (a) complete and inherent stability, however efficient the tuned circuits; (b) linearity of the amplification characteristic, even up to output R.M.S. voltages practically equal to the anode direct voltage.

As against the above, it must be pointed out that the complete amplifying unit involves two triodes, as against a single tetrode. In this comparison, however, it must be remembered that the screen-grid valve may cost as much as, or even more than, the two triodes.

Detail and Performance of the Triode Valve Radio-Frequency Amplifying Circuit

The actual design was arrived at after considerable theoretical and experimental work, the details of which are given in a paper[1] by the present writer, published in the *Journal of the Institution of Electrical Engineers*. For the sake of brevity, the present account will be mainly confined to conclusions and results.

The basic circuit is shown in Fig. 3, from which it will be seen that the scheme is essentially an application of the familiar "buffer" valve technique to the problem. The greater part of the actual voltage amplification is effected by the second of the two valves, the principal function of the first, the "buffer" or coupling valve, being to protect the input circuit against the effect of the negative input resistance of the amplifying valve. Alternatively, the function of the "buffer" valve can be described as changing the phase of the "feed-back" of energy from the output circuit in such a way as to prevent self-oscillation.

The success of the arrangement in its present form is due partly to a theoretical analysis of the most suitable values for the components, and partly to the high efficiency of modern valves, but the idea itself is not really novel, for something very similar was introduced many years ago by J. Scott-Taggart, under the title "Tuned-aperiodic-tuned."

For reasons which are detailed in the article already referred to, it is found, rather surprisingly, that the most suitable type of valve for each position is the comparatively low voltage factor, or L type—or even the small "power" class, such as the PM202 or P215. This implies a fairly high step-up ratio in the output transformer, the design of which in relation to the valve used is quite standard. The coupling resistance in the anode circuit of the "buffer" valve is not critical, but should not exceed a few thousand ohms.

As an example of the performance of such a combination of "buffer" and amplifying valve, the following case may be quoted:—

Valve—
- Voltage factor .. 13.7
- A.C. resistance .. 6,240 ohms.

Transformer—
- Secondary dynamic resistance .. 150,000 ohms at 1,000 kc/s.
- Ratio .. .. 4 : 1

Coupling resistance (R) .. .. 5,000 ohms.

Anode voltage .. 120

The voltage amplification from the first grid to the secondary of the transformer was measured for various values of the frequency. At 1,000 kc/s, for example, it was 132. The calculated value at this frequency was 3.67 for the "buffer" stage and 33.5 for the amplifying stage, giving a product of 123, which is close enough agreement in view of the uncertainty of some of the data—more particularly the grid-anode capacity.

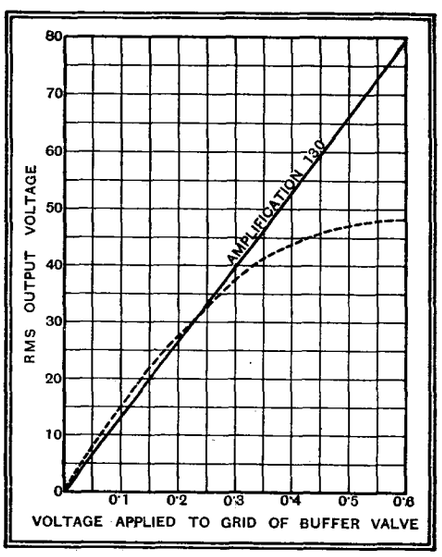

Fig. 4.—Amplification characteristic of triode-valve system at 1,000 kc/s. Dotted curve represents amplification characteristic of screen-grid valve as in Fig. 2.

The variation of output voltage with input voltage applied to the first grid was found to be as shown in Fig. 4. It will be seen that there is no sign of any departure from linearity up to 80 volts output. The dotted curve represents the performance of the screen-grid valve (see Fig. 2) over the same range.

[1] F. M. Colebrook: "A Study of the Possibilities of Radio-Frequency Voltage Amplification with Screen-Grid and with Triode Valves." J.I.E.E., Vol. 74, pp. 187-198.

A New Development in Radio-frequency Amplifiers—

The performance of this type of circuit in the long-wave range is particularly good. For example, with the same valves

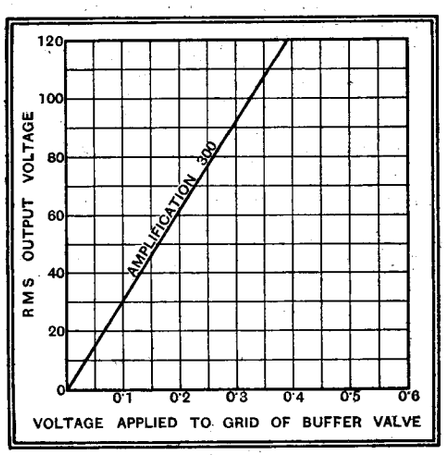

Fig. 5.—Amplification characteristic of triode system at 200 kc/s.

and components, and an output transformer having a dynamic resistance of 340,000 ohms at 200 kc/s, with a step-up ratio of 6 : 1, the measured amplifications were :—

f	150	200	250	300 kc/s.
m	280	306	337	286

and the response was substantially linear up to at least 110 volts output, as shown in Fig. 5.

Stability

In the experimental circuits the input and output coils were placed about one foot apart, in positions of minimum mutual inductance, but were not closely screened, the only screening being an earthed metal plate set up between the two circuits. In spite of this very rudimentary screening there was no tendency to instability. In fact, both calculation and measurement showed that the input circuit is somewhat over-stabilised by the rather low input shunt resistance of the buffer valve, particularly at the higher frequencies (1,000 kc/s and thereabouts). With 5,000 ohms coupling resistance the buffer-valve input shunt resistance may be as low as 10,000 ohms or so, rising to about 100,000 ohms as the coupling resistance is reduced to 500 ohms. In its simple form, as in Fig. 3, the arrangement would not, therefore, be very good, either in selectivity or sensitivity, at frequencies of the order of 1,000 kc/s. There are, however, various means of removing this excessive damping of the input circuit, and of these the best and simplest is a semi-fixed retroactive arrangement, as shown in Fig. 6. If the retroaction-control condenser is set to the maximum value consistent with stability at the minimum setting of the tuning condenser it will be found that the damping of the input circuit is satisfactorily low over the whole tuning range. Alternatively, the retroaction control can be used in the ordinary way as a control of damping. The pre-set adjustment is, however, preferable in respect of simplicity of operation.

Retroaction can similarly be applied to the output circuit in any of the usual ways, but if this is done it must be remembered that the effect of retroaction is a great increase in the "dynamic resistance" of the circuit, and the advantage of this in an amplifying stage is fully realised only if the transformer step-up ratio is made appropriately large.

The Advantages of a Low-Capacitance Triode

The performance figures given above do not represent the best that can be obtained by this system. The principal limitation is the grid-anode capacity. In triodes of normal design this is at least twice as large as it need be, because the anode and grid leads are brought through a small glass "pinch" to the valve pins in the base. For a normal triode in an ordinary valve-holder, the value appears to be anything up to 7 $\mu\mu$F. It was pointed out in the full publication already referred to that if the disposition of electrodes in the triode was that which has been adopted for the tetrode, i.e., if the grid or anode were brought out to a top terminal, the grid-anode capacity could be reduced to 3 $\mu\mu$F. or less, a change of considerable advantage in almost all applications of the triode. It is very unfortunate that the present construction became standardised before the harmful effects of grid-anode capacity had been sufficiently fully realised, and it is noted with satisfaction that in a recently announced series of valves, with a new type of holder, this separation of the electrode connections has actually been adopted.

As an example of the potentialities of the buffer-valve amplifying circuit with reduced grid-anode capacity, the following case may be quoted :—

$\mu = 10.5$
Ra = 3,000
(i.e., mutual conductance 3.5 mA. per volt)
Secondary dynamic resistance ..... = 150,000 ohms at 1,000 kc/s.
Grid-anode capacity ..... = 3 $\mu\mu$F.

The valve figures are not unduly optimistic—they are, in fact, realisable in existing valves—and the low capacity could be realised as indicated above.

Calculation shows that with such valves it would be possible to get an amplification of 230 from the grid of the buffer valve to the transformer secondary at 1,000 kc/s. Moreover, the effective shunt resistance of the buffer valve would be nearly four times as high as for a similar valve with the normal grid-anode capacity, an advantageous feature even if the damping effect of this resistance is eliminated as described above.

Practical Realisation

Finally, it is desired to emphasise the fact that the triode valve amplifying circuit here described is a useful and practical one—at least for the "home constructor" if not for commercial construction. Apart from advantages in respect of linearity of operation, it is particularly suitable for the type of receiver in which high selectivity, with single-peak resonance curves, is combined with tone correction, since there is no upper limit to coil efficiency imposed by considerations of stability. The writer, for example, uses a home-made set of this kind, with two loosely coupled input circuits, a triode-valve radio-frequency tuned-transformer stage, embodying two ordinary L-type battery valves, and connected as in Fig. 6, diode rectification, a tone correcting stage, one audio-frequency stage, and a "mains" output valve. Though only three tuned circuits are used, the selectivity is quite sufficient for the best British and foreign transmissions, and the quality is very good in relation to this selectivity.

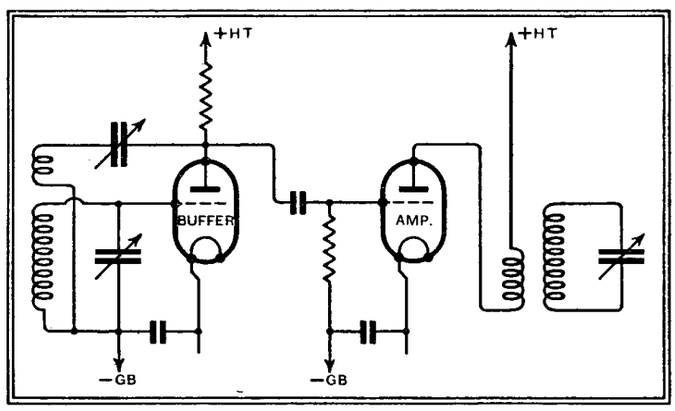

Fig. 6.—Triode-valve radio-frequency amplifying system, with retroactive control of damping due to buffer valve.

FROM THE R.I. FACTORY

A Specialised DC Set

THE R.I. "Airflo" receiver, which was one of the principal Olympia exhibits of Radio Instruments, Ltd., Purley Way, Croydon, is now being produced for DC as well as AC mains. The new receiver is not a universal AC/DC set, but, to quote the maker's phrase, "a specialised DC job." A barretter is used to regulate the heater and HT current and the smoothing has been designed to ensure quietness of working in districts where mains ripple is notoriously troublesome. The price of the new set is 15 gns.

The Bulb of Many Uses

(Concluded from page 34 of last week's issue)

Some Simple Saw-tooth Circuits

RELATIVELY simple circuits, contrived in many cases with the help of discarded wireless apparatus, can be used successfully in carrying out experimental work with the help of the cathode ray tube.

THERE is little doubt, however, many users will soon wish to use a saw-tooth voltage giving a linear time base stroke. Fortunately there are quite a number of simple and inexpensive circuits for this purpose, some of which can readily be made up from components most experimenters are likely to have available.

One of the earliest of these used with a cathode ray tube (and still quite a useful one) is illustrated in Fig. 11. It utilises the arrangement known as a "ticking neon lamp" circuit. The components are a neon lamp, a condenser C (for which 0.1 mfd. is a useful general value) and a diode which can be an old bright emitter valve with its grid and anode connected together. A bright emitter or thoriated filament is essential; an oxide coated valve is useless. When the HT voltage is applied a charge builds up across the condenser at a steady rate of charging current due to the action of the saturated diode. This goes on until the condenser voltage reaches a value sufficient to trigger off the neon lamp. The condenser is then immediately discharged, or rather, its charge is reduced to a value which no longer keeps the neon lamp excited. The condenser charge proceeds to build up to striking voltage again, and so on, at a rate depending on the capacity of the condenser and the brightness of the diode, which can be smoothly varied over fair limits to get an appropriate rate. For greater variation different sizes of condenser can, of course, be used. The use of the diode is to make the long part of the saw tooth (of Fig. 8 (*b*)) straight, instead of exponentially curved as it would be if a simple resistance were used as the charging impedance in series with the condenser.

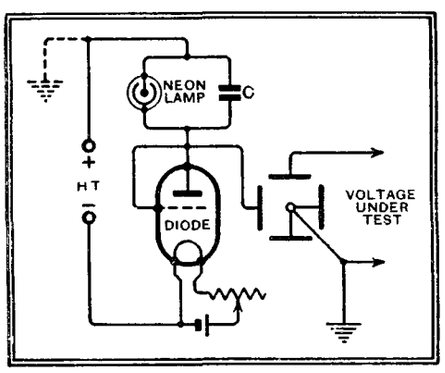

Fig. 11—A saw-tooth time base circuit depending on the periodic charge and discharge of a condenser in association with a neon lamp.

If the tube is being operated off a low HT voltage (300 or 400 volts), the same source can be used for the time base and the particular connections of Fig. 11 are arranged to allow this.

Another simple saw-tooth circuit which is an old time base favourite is shown in Fig. 12. It is a "squegger" or "ticking grid" circuit, consisting of an oscillator with a high impedance between grid and filament. This consists of the condenser C and the diode as a grid leak. The oscillator coils should be such as to give an ordinary coupled-circuit oscillator system of 150 to 300 metres, and can be tuned by small condensers to give the strongest oscillation possible. After a few cycles of oscillation the grid goes negative and oscillations stop. The condenser then discharges through the diode giving the slow time stroke of the saw tooth. When the condenser discharges the oscillations begin again and quickly recharge the condenser, giving the sharp back stroke. The rate, as before, depends on the condenser and the brightness of the diode, which is again used in this case to give a straight line to the saw tooth. The disadvantage of this circuit is that, since radio frequency is generated, it tends to "speak" into other wireless circuits, but this can be minimised if not completely suppressed by screening. It is not desirable to use a common HT for tube and time base, but the currents taken are small and a simple eliminator of conventional type can be used.

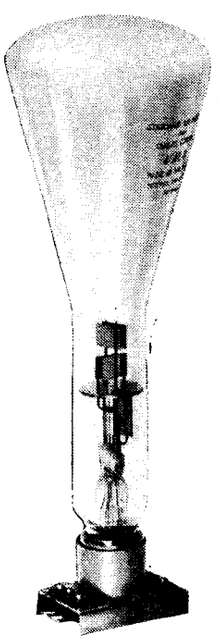

Standard Telephones and Cables tube.

A newer and very useful saw-tooth circuit is shown in Fig. 13. It is rather similar in operation to the neon lamp circuit of Fig. 11, but uses a thyration as the discharging device. The ordinary type of mercury vapour triode or thyratron is suitable for time base frequencies up to 1,000 or so, but beyond that a neon thyratron is preferable and is now made by several firms.

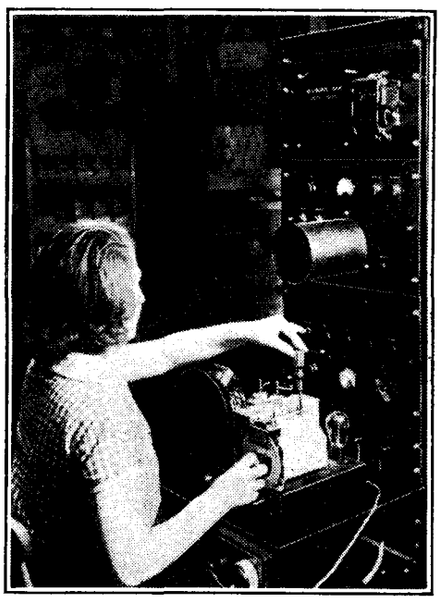

Courtesy A. C. Cossor, Ltd.

Resonance curves made visible: the cathode ray tube as an aid to trimming ganged circuits.

A particularly valuable feature of this circuit is the ease with which it can be "locked" or "synchronised" with the voltage applied to the vertical plates. When using a time base for examination of a higher frequency source (such as an oscillator) a steady pattern of the type shown in Fig. 9 is obtained only when the "vertical frequency" is very exactly a multiple of the frequency of the time base. If this is not the case the pattern drifts at a rate depending on the difference from such a multiple ratio. If we move one control very slowly from one multiple ratio to the next the design on the screen moves from a simple pattern through a series of

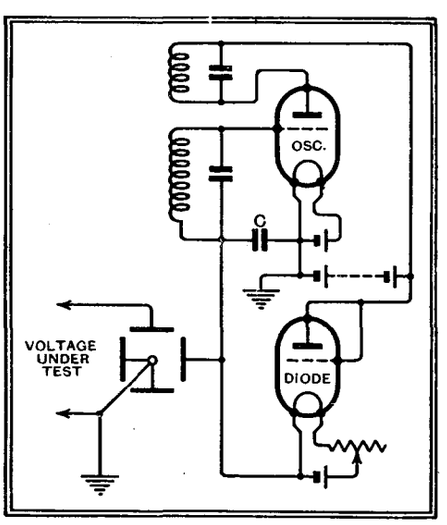

Fig. 12—A "squegger" oscillator as a generator of a saw-tooth wave-form.

The Bulb of Many Uses—

patterns of varying complexity to the next exact ratio. An indication of some of the simpler cases that can be seen is given in Fig. 14, where we start with one cycle of the vertical to one sweep of the time base and then proceed to increase the frequency of the vertical until it is 2/1. The examples given are only a few and certainly the simplest that are to be seen, and all are very difficult to hold steady.

In practice, however, we very rarely do want to hold such patterns as the intermediate values, but rather of the exact multiples such as 1/1, 2/1 or the 10/1 of Fig. 9 (*b*). This is where the ability to lock comes in very useful. This can be done by feeding into the grid of the thyratron a small fraction of the voltage being applied to the vertical plates of the tube, as shown by the synchronising terminals at the left of Fig. 13. With a high resistance potentiometer (1 or 2 megohms) the load of this circuit on the output of the circuit under test is negligibly small, and adjustment of the value joined to the grid causes the pattern to change from a slowly drifting one and to assume a steady condition as already shown in Fig. 9 (*b*). It will be seen that the connection indicated is actually that shown by the dotted line in Fig. 13.

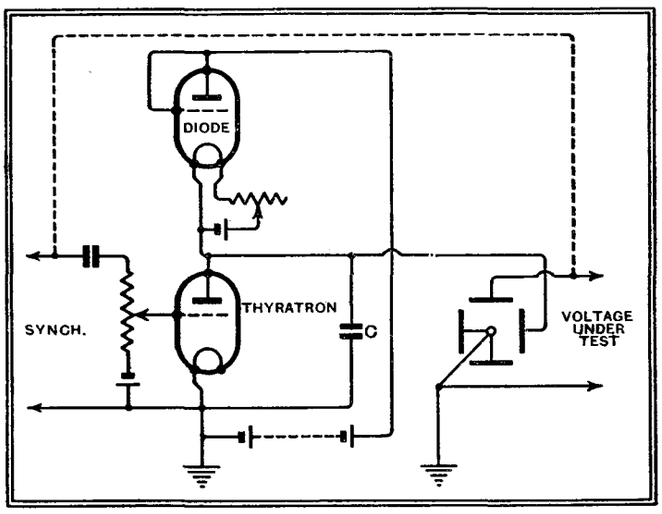

Fig. 13—A Thyratron time base circuit.

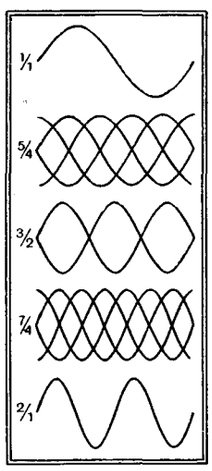

Fig. 14—Patterns on screen with simple fractional relations between linear time base and vertical voltage.

In all the three saw-tooth circuits shown it will be seen that the diode is at a high negative potential to earth, and it and its battery should therefore be well insulated. Instead of a diode a screened grid or pentode valve can be used, taking advantage of the length of approximately flat ia/Va characteristic which both valves give. The speed is then varied by controlling the screen voltage by means of a potentiometer, or additionally by condenser steps as already discussed.

Lastly, we must deal with what are most conveniently called "shift" circuits. The saw-tooth circuits shown, and most others in practical use, have some DC component in their output which deflects the time base to one side of the screen. As a rough and ready measure it can, as already stated, be restored by a magnet, or more smoothly and controllably by extra coils carrying a direct current whose value is varied by means of a rheostat. A very neat alternative is to use DC voltages applied between one plate (of each pair) and anode, while the other plate is in use for alternating deflection. This is only possible when all four deflecting plates are available for connection, that is to say, when they have no common connections inside the tube.

The necessary shift can be obtained by means of fixed voltages between plate and anode, joined in the sense to give the displacement necessary. On the other hand, it is frequently useful to be able to move the pattern smoothly over the screen, and typical methods of doing this are illustrated in Fig. 15. The potentiometer used can be of quite high resistance, being thus very light on battery consumption. The arrangement shown for the horizontal deflection is for one-way movement only, according to the sense of the battery connection, which can be reversed if desired. The shift on the vertical deflection allows for smooth movement up or down, but, of course, either arrangement can be used on either deflection according to needs. The diagram also shows the schematic arrangement of locking or synchronising the "work" and time base, after the manner already discussed in connection with Fig. 13 in order to get a steady pattern.

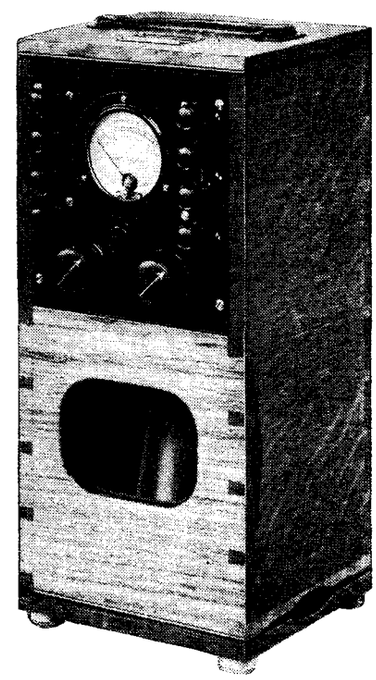

An oscillograph unit (Standard Telephones and Cables, Ltd.).

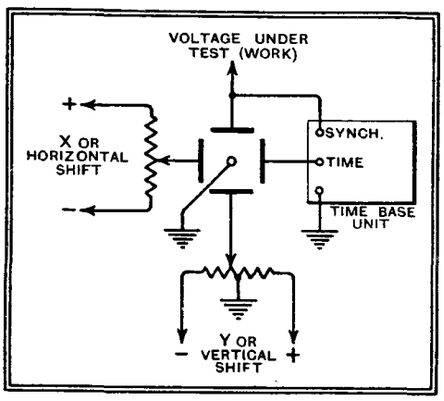

Fig. 15—Principle of "shift" circuits

Throughout these articles the attempt has constantly been to indicate general methods and principles which any experimenter can apply with the minimum of difficulty to his own requirements. In particular, it is hoped that they may help him to cut his coat according to his cloth, and, fortunately, it is not so difficult as it is in "gents' tailoring" to add to the coat as one gets more cloth.

RELAYS FROM CANADA?

CANADIAN listeners, it appears, prefer to receive British programmes direct rather than *via* the American networks. For this reason the Canadian Broadcasting Commission is installing a special short-wave receiving station near Ottawa for the purpose of obtaining reliable transatlantic reception whenever practicable.

According to a correspondent, this station will not only dispose of the problem of cost, which is considerable when reception comes *via* the United States, but will also, in conjunction with the Commission's magnetic recording equipment, serve to overcome the time difficulty. Programmes broadcast in the evening hours in London will be received during the afternoon hours in the Dominion, be magnetically recorded and redistributed two or three hours later.

The Commission hopes that before long it will be able to transmit the best of Canadian programmes to Great Britain. Here, again, the question of cost arises. Broadcasting equipment for short-wave transmission to the Mother Country already exists, and could be used for regular transatlantic service if the Commission could afford about £10,000 yearly. It is hoped in the near future to secure the necessary funds.

HINTS and TIPS

Practical Aids to Better Reception

Unwanted Couplings

WHEN a tendency towards uncontrollable instability becomes more marked as the wavelength to which the receiver is tuned is progressively increased, we have a fairly certain indication that common resistance coupling between two or more circuits is responsible for the trouble.

In nine cases out of ten effects such as these are due to a faulty connection between the rotor section of the ganged tuning condenser and the earth line of the set.

Experience shows that the trouble is particularly likely to arise when one depends for this connection on contact between the frame of the condenser and the metal chassis. What happens is illustrated diagrammatically in Fig. 1, where

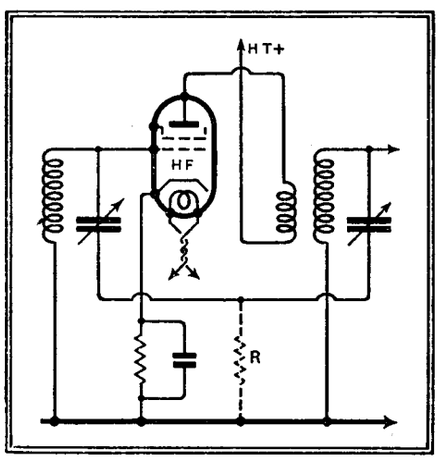

Fig. 1.—The "phantom" resistance R represents a bad contact between the gang condenser and chassis; it is common to both tuned circuits and may provoke instability.

the resistance of the connection in question is indicated by R. This "artificial resistance" will be seen to be common to both grid and plate circuits of the HF valve.

A Free Wattmeter

THE current consumption of mains-operated broadcast receivers—at any rate, those working on AC mains—is so modest that it may almost be dismissed as negligible. But there are occasions when it is useful to be able to check consumption, if only to confirm or to refute the suspicion that leakages are occurring.

Although the average amateur is not equipped with an AC milliammeter or ammeter, a sufficiently accurate estimation of energy consumed can generally be made with the help of the domestic electrical supply meter. The procedure is to switch on the receiver at a time when no other load is imposed and then to count the number of revolutions made by the rotating disc in the meter over a period of, say, one minute exactly. Then switch off the receiver and observe the number of revolutions made when single lamps or combination of lamps of various wattages are in operation. The consumption of the receiver may then be taken as equal to the rated wattage of the lamp or lamps, which cause the meter disc to rotate at the same speed.

A Wasted Baffle

MOST readers are aware that the purpose of a loud-speaker baffle is to improve bass reproduction by preventing what may be described as a kind of "short-circuiting" of sound waves, corresponding to low notes. It may not have occurred to them, however, that special high-note reproducers or "tweeters" (which are now coming into more general use) do not stand in need of such adventitious aids. As these speakers are not designed to reproduce low notes, it is clearly a waste of effort to apply a principle intended solely to improve low-note response. Indeed, one may sometimes go further and say that reproduction is likely to be improved if the task of reproducing the lower register is left entirely to the main speaker.

Estimating Current

IT is not a difficult matter to calculate with sufficient accuracy the amount of current drawn by a receiver from the mains. So far as AC sets are concerned, the simplest procedure is to add together the wattages of LT and HT circuits and then to add about 25 per cent. for losses in the power transformer.

As an example, we may take the case of a straightforward AC set with five valves and a rectifier, all consuming 1 amp. at 4 volts in the heating circuits. Low-tension consumption is therefore 24 watts, while the AC consumption in the HT circuit may be roughly estimated as equal to the rectified DC output—say, 60 milliamperes at 250 volts, or 15 watts.

This gives us a total of 39 watts; say 40 watts for the sake of round figures. Adding 25 per cent. for transformer losses brings up actual consumption of energy from the mains to 50 watts. With a standard supply of 250 volts this would be equivalent to a current of 0.2 amp.

This leads up to a matter about which there is a good deal of misconception. When fitting a protective fuse in the mains lead it might be thought that in these circumstances ½-amp. fuse would be, if anything, on the heavy side, and would hardly afford sufficient protection. In practice, however, it is seldom possible to cut things so fine as this, and it will be found necessary, as a rule, to employ a fuse rated at four or five times the consumption of the set. In the case under consideration one would normally fit a 1-amp. fuse; anything lighter would very probably fail to stand up to the comparatively heavy surge of current which takes place at the moment of switching on the receiver.

Concealed Frame Aerials

DIRECTIONAL reception with the help of a frame aerial is, as has been pointed out in these columns, sometimes a valuable aid towards the elimination of interference. Indeed, it is not an exaggeration to say that this system does, in some cases, make it possible to receive distant stations with high quality in circumstances where they would otherwise be unreceivable, or at any rate, when such sharp tuning would be necessary that quality would be seriously impaired.

The trouble about frame aerials of effective size is that they are bulky, unsightly, and by no means easy to camouflage. An ingenious solution of the problem of accommodating them which was recently noticed seems good enough to pass on; the medium- and long-wave frames were mounted in the space normally occupied by the drawers of a desk, as shown in the accompanying illustration.

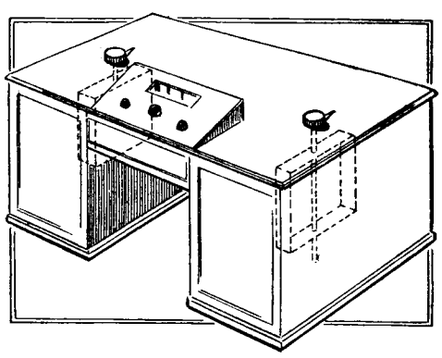

Concealed frame aerials: novel application of a disused writing desk.

When looking for a place to install a frame, one is influenced subconsciously by open-aerial practice, and tries to find an elevated situation. But, within the limits of a room, height is not of much consequence, and a low position is likely to be effective. In some circumstances it might be convenient to mount a frame under a table.

Modern Tuning Coils

Design and Construction of Present-day Types

RECEIVER performance can be predicted with a fair degree of accuracy by studying the characteristics of its coils. The principal factors that combine to make an efficient coil are discussed in this article and some examples of modern construction are given.

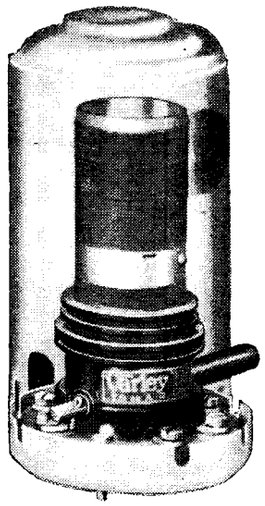

Typical screened air-core coil; a Varley product.

THE windings of tuning coils, as bought for inclusion in a receiver, consist essentially of two parts. One of these is the winding which is actually tuned, and it is fair to regard this as the most important part, if only for the reason that the selectivity and the sensitivity of the finished set depend, in the last resort, upon the characteristics of this winding. As auxiliaries, there are whatever primary and reaction windings the needs of the circuit demand; but, since these have only an indirect bearing upon sensitivity, and practically no effect on the selectivity of the final receiver, they may quite reasonably be regarded as secondary in importance to the tuned winding itself.

The tuned winding, like every other component used in high-frequency circuits, can have its properties completely described under the three heads of inductance, capacity, and resistance. The range over which it is necessary to tune the coil to give reception of the desired transmitters determines its inductance fairly definitely; for modern circuit-conditions this usually has to be some 150 to 160 microhenrys for the medium-wave band, and about 2,100 microhenrys for the long-wave band. In settling this figure the designer has very little latitude of choice.

The matter of the capacity of the coil is not a very important one, for a high capacity, provided it is free from losses, does no more than restrict the tuning range at the lower end, leaving the performance of the coil completely unaffected for wavelengths to which it will still tune. In practice the stray capacity across a coil never is free from losses, so that a high value of capacity adds to the resistance of a coil. It is chiefly from this point of view that "low self-capacity" is a virtue.

On the value of the resistance of the tuned winding, the performance of the coil largely depends. If the resistance is high, the resonance-curve will be flat, and the response to high-frequency currents of slightly different frequencies will be more nearly the same. In other words, the selectivity of the tuned circuit, and in consequence that of the receiver of which it forms a part, will not be very high. As Fig. 1 shows, a reduction of resistance, leading to a higher ratio of L/r, gives a sharper resonance curve.

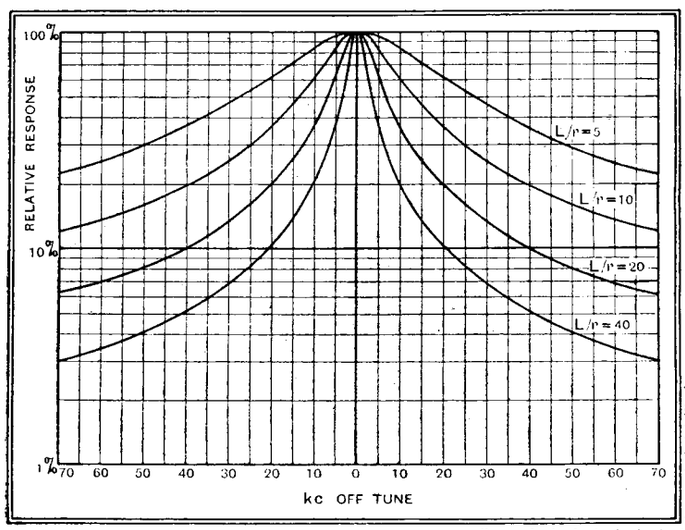

Fig. 1.—*Dependence of Selectivity on Coil Resistance.* Resonance curves, expressed as percentage response of resonant voltage, showing increasing selectivity as the ratio L/r is raised by decreasing r.

It is not only selectivity that is lost when the resistance of a tuned circuit is made high; amplification also decreases. The curves of Fig. 1 were all plotted to the same height to make easy the comparison of selectivity; by replotting them as they really are, as in Fig. 2, the response given by the various circuits to the same energising voltage (from aerial or preceding valve) is clearly shown. The lower the resistance the more vigorous the response. On both counts, therefore, we want coils of low resistance.

Those who are unaccustomed to designing coils might be excused for offering the naïve suggestion that the desired goal of low resistance could be reached simply by winding the coil of thicker wire. Unfortunately, it is the resistance to high-frequency currents, and not to ordinary direct current, that concerns us here, and we may safely assume that every coil on the market to-day is wound with wire of the correct gauge for its intended use. Either thinner *or thicker* wire than this would give a coil of higher resistance.

To decrease the high-frequency resistance of the winding, the only course possible is to increase the size of the coil and, in some cases, to wind it with stranded wire ("Litz"). In small air-core coils Litz is not usually any better than solid wire, while increasing the size of the coil is expensive, both directly by the extra expenditure of material in the coil itself and indirectly by increasing the overall size of the set and its cabinet. Matters are not helped by the fact that, to extract full advantage for an increase in size of coil, the screening box would have to be

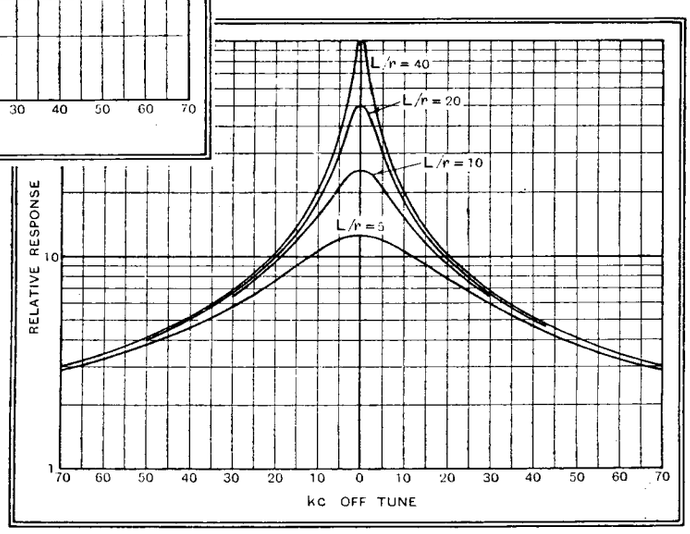

Fig. 2.—*Comparison of Sensitivity of Coils of Different Resistance.* Higher values of L/r (lower values of r) give circuits which yield a greater response to an applied voltage.

Modern Tuning Coils—

increased in dimensions even faster than the coil itself.

Balancing up cost and convenience against efficiency, it is probable that coils of one to one-and-a-quarter inches diameter represent as good a compromise as one is likely to find. It is hardly worth while to take any great pains to improve the efficiency of the actual winding as long as it has connected across it the usual synthetic insulators as found in valve-holders, tuning condensers, and the terminations of the coils themselves; at the lowest wavelengths the dielectric losses in the capacity through these insulators sets an upper limit to efficiency, irrespective of coil design. But by a sufficient sacrifice in bulk decidedly better results could be attained at the longer wavelengths (350 to 550 metres).

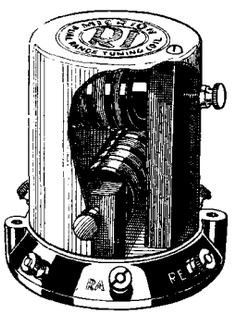

R.I. Micrion coil fitted with adjustable iron cores.

On the whole, it has been found cheaper and more convenient to attain the same end by using coils wound round an iron-dust core. These iron-core coils have considerably less wire in them than coils of the same inductance from which the core is missing; that portion of the total resistance due to losses in the wire itself is therefore reduced. To set against this gain, new losses are introduced by eddy currents and hysteresis in the core itself; measurement shows that at the lowest wavelengths, where these losses are most pronounced, the average iron-core coil has about the same resistance as a good air-core coil. From 250 metres upwards the iron-cored coils have a very definite advantage, until by the time 550 metres is reached a good iron-core coil has little more than half the resistance of its air-core rival.

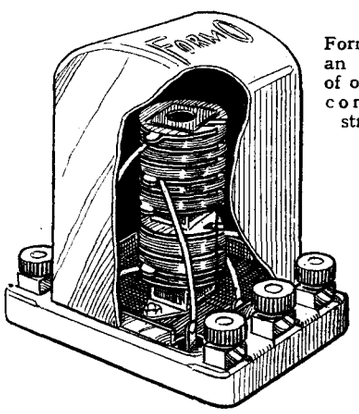

Formo coil, an example of open iron-core construction.

On the whole, iron-core coils are more expensive; the iron-core RI Micrion coil shown costs a few shillings more than a good air-core type. For this there are several reasons, in addition to the cost of the core itself. In the first place, it can be shown, either by calculation or measurement, that the iron-core confers no appreciable benefit unless the coil is wound with Litz. The usual wire employed has either ten strands of 45 s.w.g. or twenty-seven strands of 47 or 48 s.w.g., and it is essential that each strand should be separately insulated. Such wire is expensive, both to buy and to handle in the factory, for a broken strand, or one not connected at the end of the wiring, means a rejected coil. Further, the lower resistance, and consequent sharper tuning, of iron-core coils means that matching for ganged sets must be more accurate. The claim usually made for coils sold in sets is that their inductance does not depart from a fixed standard by more than a quarter of one per cent. Even this accuracy, in conjunction with the usual half per cent. accuracy of the gang condenser, may leave two circuits tuned to frequencies some 7 kc/s apart at 300 metres. Nor are coil and condenser errors the only ones to be considered. Remembering this, it becomes evident that coils more efficient than those now in common use would offer no advantage; it is probable that the present iron-core coils are the most efficient that could usefully be employed.

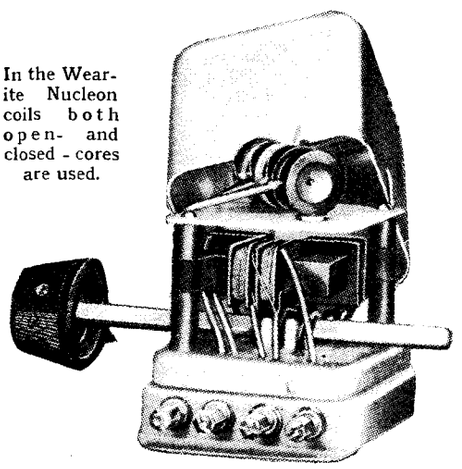

In the Wearite Nucleon coils both open- and closed-cores are used.

Iron-core coils fall into two different types, depending on the arrangement of the magnetic circuit. Where the greatest compactness is desired, it is necessary to use a closed iron circuit, as in the Ferrocart coils, which are wound like a miniature mains transformer. Owing to the smallness of the external field, such coils can be closely screened without either loss of efficiency or serious variation of inductance. The open-core coils have a slightly higher high-frequency resistance, and require a more roomy can, but, owing to their simpler construction, are easier to make and match, and hence cheaper to buy. One firm, Messrs. Wright and Weaire, use both types in their "Nucleon" coils. The illustration shows the difference in construction. Most firms have adopted one or other style to the exclusion of the other; the Goltone coil illustrated is an excellent example of open-core construction, the long-wave and short-wave sections being mounted with their cores at right-angles to prevent interaction.

Taking into consideration all the points discussed, there can be very little doubt that accurately matched iron-core coils are worth their extra cost for the sake of the greater selectivity and sensitivity they provide over the upper half of the wave-bend (300 to 550 metres), while air-core

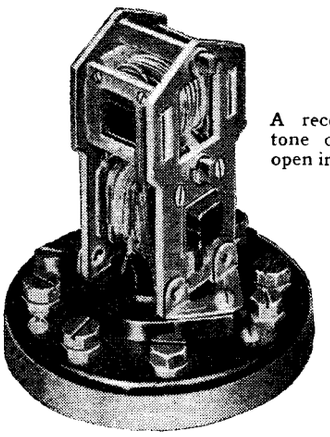

A recent Goltone coil with open iron cores.

coils of the usual size are a very satisfactory compromise for receivers in which the absolute maximum of efficiency is not required.

The value of iron-core coils over the long-wave range is more doubtful. The writer's personal opinion is that a well-designed air-core coil provides a sufficiently low resistance, bearing in mind that on this wave-band one has to be careful not to tune so sharply that the side-bands are tuned out, resulting in loss of high notes in the detected signal. In a band-pass filter, where the peak of the response-curve can be broadened, this criticism does not apply, but in cascaded circuits they are inclined to be dangerous if they have a lower resistance than a well-designed air-core coil.

In the case of the intermediate-frequency transformer, which consists in practically every case of two coupled tuned windings forming a band-pass filter, much the same considerations hold as for long-wave coils. At this frequency a compact coil is quite as efficient as any coil need be, so that a fairly small component is perfectly satisfactory even when no iron core is used. A well-known example of this type is the Colvern 110 kc/s intermediate transformer, consisting of two bobbin-wound coils of adjustable separation.

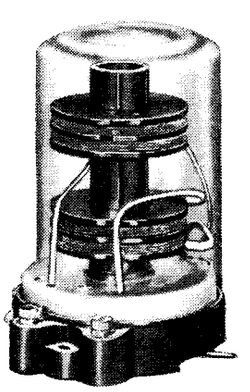

Colvern 110 kc/s IF transformer with adjustable coils and trimming condensers in the base.

When weakly coupled, a combination such as this gives a resonance-curve with rounded top and fairly steep sides, yielding reasonably high selectivity together with a certain loss of side-bands. By

Modern Tuning Coils—

closer coupling, the peak of the curve can be flattened, or even converted into a typical "double-humped" curve, thus restoring side-bands and reducing selectivity. The full lines of Fig. 3 show the kind of curves obtainable.

By replacing the coils with others having iron cores, the resistance of the two tuned circuits can be considerably reduced, leading to resonance-curves with much steeper sides. At the weakest coupling selectivity can be made enormous, but only at the cost of a very marked loss of side-bands. With closer coupling more reasonable compromises can be obtained, and for any given transmission of side-bands the selectivity is always higher than with the corresponding air-core coils, as indicated by the dotted curves of Fig. 3. The gain of the stage in which the iron-core transformer is incorporated is also higher. It thus scores in all ways over its air-core counterpart.

It does not pay, however, to be too greedy for these benefits, for coils of too low a resistance introduce difficulties when the coupling is made close enough to ensure full transmission of side-bands. The two peaks of the tuning-curve become sharper with reduced coil-resistance, so that the curve *may* develop "rabbit's ears," as suggested, in exaggerated form, in Fig. 4. If such a curve is actually obtained in the set, side-band screech becomes very unpleasant, even with the set accurately tuned; in practice, the tuning of the IF amplifier becomes so difficult that, unless a cathode-ray curve-tracer is used for setting it up, all the circuits are pulled in to one peak. The result is double-point tuning, with side-band cut at each point.

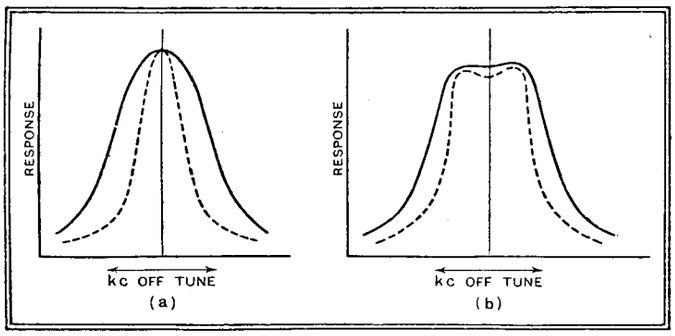

Fig. 3.—*Full Line Curves.* Types of resonance curves of air-core IF transformer, (a) loosely, and (b) tightly coupled.
Dotted Curves. The same, for iron-core transformer. This gives much higher selectivity for very little more loss of sidebands.

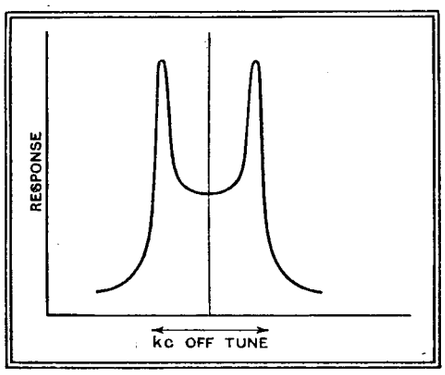

Fig. 4.—If coils of excessively low resistance are tightly coupled in an endeavour to get a flat-topped curve, "rabbit's ears" make their appearance.

For 110 kc/s intermediates, therefore, iron-core coils are an advantage when high selectivity is wanted, but they must not be too "good" if the fullest side-band transmission is required.

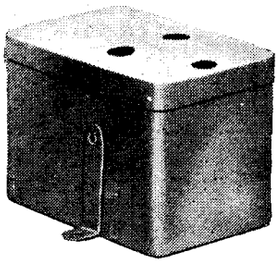

A small variable coupling condenser is used in the Colvern iron-core IF transformer.

Transformers intended for use at 450 kc/s or thereabouts are improved, without any qualifications whatever, by the use of iron cores and stranded wire, since at this frequency rabbit's ears do not develop until the top of the resonance curve is made far wider than could possibly be required.

The provision of coupling between the two halves of an iron-core transformer may be a little difficult. If open cores are used, these must be adjusted to be nearly at right-angles if the coupling is not to be too tight, and this setting is surprisingly critical. If the cores are closed, only stray field is available for coupling, and this is likely to vary from transformer to transformer. In the Colvern iron-core intermediate the problem is solved by setting the coils at quite light coupling, and connecting a small condenser, variable to provide variable coupling, between the high-potential points, as shown in Fig. 5.

Probably one of the largest items in the cost of coils as bought is the work of matching them to one another or to a predetermined standard. In the case of air-core coils wound on tubes for the medium-wave band, this can be done in two stages. The first, which may or may not be necessary, consists in removing turns until the inductance has been brought down so near to the correct value that the removal of one more turn would overshoot the mark. The second stage, that of fine adjustment, is usually carried out by spreading the end turns a little, thereby increasing slightly the overall length of the coil. By this means an absolutely exact adjustment to the correct inductance can be made.

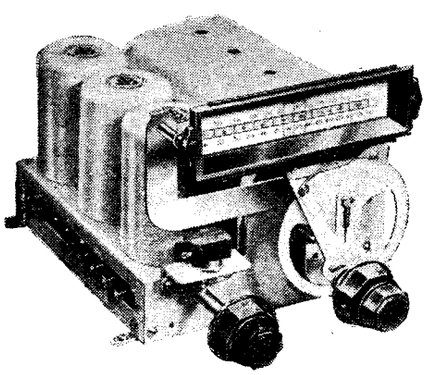

J.B. Linacore, a three-circuit assembly for use in straight sets; iron-core coils are fitted.

Matching Coils

But when the can is put over the coil the inductance falls by several units per cent.; the preliminary adjustment has therefore to be made so as to bring the coil, uncanned, to an inductance which has been found, by previous experiment, to be in excess of the desired final value by an amount sufficient to compensate for the effect of screening. Since trifling variations in the distance between coil and screen give rise to equivalent variations in the effect of the screen on the coil, absolute accuracy in matching cannot be achieved in this way, but with suitable design the discrepancies can be brought down to about a quarter of one per cent.

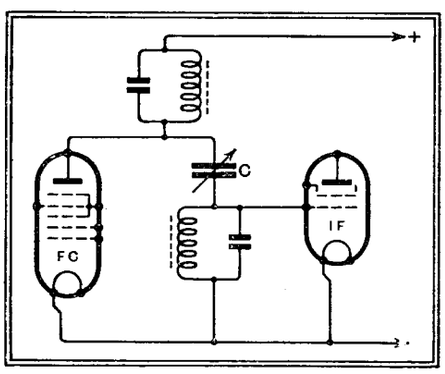

Fig. 5.—Coupling between two halves of an iron-core transformer can be provided by a condenser C, made variable to enable the band-width to be adjusted.

Long-wave coils are easier; they have so many turns that adequate fineness of control can be had by adjustment to the nearest turn. The effect of the can again has to be allowed for.

IF transformer windings may or may not require accurate adjustment; it depends on the range covered by the trimmers by which they are eventually to be tuned. In transformers where the main tuning capacity is fixed, leaving the trimmer to do no more than compensate for circuit strays, it would be quite satisfactory to adjust each coil to its own fixed tuning capacity, thus matching the resonant frequency of the whole rather than individual values of inductance and capacity.

The matching of iron-core coils is more difficult, owing partly to variations in the permeability of the core material. It is first necessary to get the winding right to the nearest turn, which involves making

Modern Tuning Coils—

connection to the multi-strand wire with which such coils are wound. The final setting then has to be made by manipulation of the core, displacing it with respect to the wound bobbin until the required inductance value is reached. It is then fixed firmly in position with cement. The lower resistance, and consequent sharper tuning, of iron-core coils makes accurate matching even more essential than with air-core coils. The effect of the can, especially with closed-core coils, is fortunately not very marked.

In the case of a straight-HF receiver ganging will be perfect if all coils are matched and if all sections of the tuning condenser have the same capacity. The absolute values of the minimum capacity in the various circuits do not matter, so long as all are adjusted to be alike by correct setting of the trimmers. Perfect ganging in a superheterodyne is less simple than this; it can only be achieved if minimum capacities, as well as inductances, all have their required values. Although ganging a superhet is easy enough if the necessary gear is to hand, the writer, who has ganged dozens of them, would hesitate to undertake the task without the aid of a wavemeter capable at least of absolutely accurate resetting to a predetermined wavelength.

With this in mind, several manufacturers have issued complete "packs" consisting of a set of matched coils built up on a small chassis with the tuning condenser and wave-change switch. By this means much fuller control over the tuning conditions of the final receiver can be attained, and true accuracy of ganging more nearly assured.

The C.A.C. "Superpak," of which an illustration is shown, is a good example of a unit of this type. It consists of a

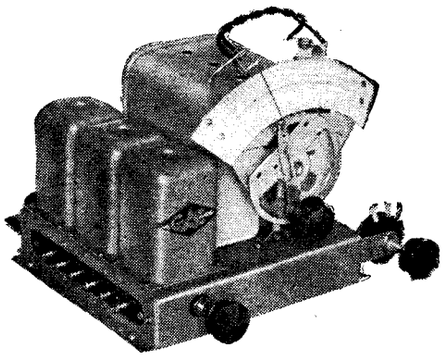

C.A.C. Superpak embodying air core coils and consisting of a band-pass filter and oscillator section, for superheterodyne receivers.

band-pass filter for preselection, together with an oscillator coil designed and adjusted to run at a frequency separation of 110 kc/s from the filter. To ensure a symmetrical layout of controls on the set, the chassis is extended to include the volume control.

Similar "packs" are also available for straight-HF circuits, and, though their adoption in preference to a selection of separate components has no such influence on the performance of the finished set as in the case of the superheterodyne pack, they are at least a great convenience to the constructor.

THE PIEZO-ELECTRIC PICK-UP

Constructional Details of the Head

A VERY natural desire to see "how it works" is easily satisfied in the majority of moving iron pick-ups, for the pressed metal cover can generally be lifted after removing one screw to reveal all the internal arrangements. The vital elements of the piezo-electric pick-up, however, are sealed in a moulded bakelite "cartridge" which most people would hesitate to tamper with, although the temptation must often have been very great.

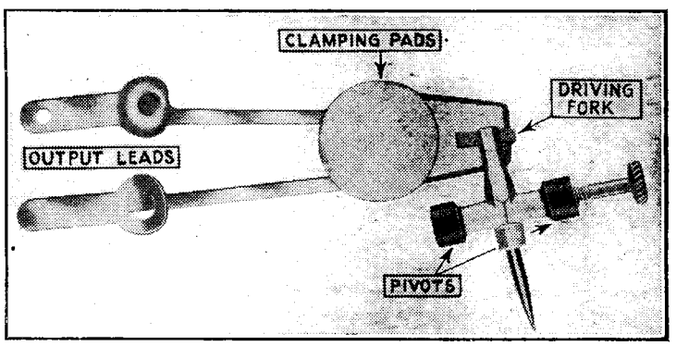

Crystal element and driving stylus of piezo-electric pick-up ready for assembly in bakelite housing.

The accompanying photograph will no doubt supply the answer to most of the questions which have been asked and either confirm or refute the conclusions reached as a result of speculation. It will be seen that the crystal element is tapered to give the requisite degree of flexibility and that it is clamped at its widest end between circular pads of semi-resilient material. The needle holder, which is of light material and low inertia, is coupled to the crystal by a fork-end which, in common with the pivot bearings, is bushed with suitable material to prevent the development of chatter. The voltage generated on the collecting foils covering the surface of the crystal is carried to the terminal tags through strip extensions.

In a pick-up of this type the application of "damping" (by which is really meant "restoring force") is limited to that necessary to give lateral support to the weight of the crystal element and tone arm since there is no magnetic attraction to be held in check. Actually the needle pressure need not exceed 1½oz.

DISTANT RECEPTION NOTES

THE power of Radio-Paris is to be raised as soon as possible to 150 kilowatts. This sets one wondering whether there will be a Radio-Paris Effect, like those of Luxembourg and Droitwich. If there is, it may be a particularly interesting manifestation, since Droitwich, Brookmans Park, and Paris are nearly in a straight line.

There is a point about the Droitwich Effect which seems worth consideration. Long-wave stations seem to be innocent of causing any trouble with those on the medium waves so long as their power is 75 kilowatts or less. The limit may be even higher than this, for Warsaw does not appear so far to have produced an "effect." On the other hand, each of the two 150-kilowatt long-wave stations very definitely has. Is there a critical output rating? If so, does it lie in the region of 150 kilowatts? Again, if the power is increased much beyond 150 kilowatts, does the trouble cease? One does not seem to have heard of the 500-kilowatt Moscow appearing as a background to medium-wave stations.

Have You "Bagged" Budapest ?

Has any reader picked up Budapest No. 2, which is now operating—or, at any rate, testing—with an output power of 20 kilowatts on a wavelength of 834.5 metres? The transmitter is, I believe, the one which radiated the Budapest programmes on 549.5 metres before the present 120-kilowatt plant was brought into use.

Conditions for long-distance listening continue to be very good so far as European stations are concerned, though they are not ideal at the moment of writing for transatlantic reception. Lest this statement should be found self-contradictory, let me hasten to explain. There is a certain amount of mild atmospheric interference whose effects are hardly noticeable when one is listening to the more powerful Continental stations. The volume control is then well removed from the maximum position, and the signal-to-noise ratio is such that any slight interference that exists is drowned.

But when transatlantic listening is toward, it is often necessary to work the set in its most sensitive condition owing to the much smaller field strength of the transmissions. In such cases the signal-to-noise ratio is very different, so that crackles and frying noises are heard. Only on nights when atmospherics are almost entirely absent is it really worth while to try for American stations.

There is some improvement amongst long-wave stations. Huizen, Radio-Paris, Zeesen, Kalundborg, and Oslo are all usually receivable without interference. Luxembourg is occasionally well heard, and the Warsaw programmes may be tuned in clear of interference in the early evening.

Athlone, Breslau, and Königsberg have been heterodyned on several recent occasions, whilst both Brussels stations, Leipzig, and Nürnberg have suffered on odd evenings. Apart from this, there are few complaints to make. Stations which can be relied upon are Rennes, Trieste, Frankfurt, Bordeaux, Hilversum, the Poste Parisien, Hamburg, Toulouse, Berlin, Milan, Munich, Rome, Stockholm, Cologne, Lyons, Prague, Vienna, Stuttgart, Beromünster, and Budapest—a lengthy list of providers of alternative programmes.

D. EXER.

The Question of Safety

Thoughts on the I.E.E. Regulations

By "CATHODE RAY"

COMPARED with Britain, Germany, or U.S.A., France has been curiously backward and unsystematic in her broadcasting (although, come to think of it, the first regular broadcasting I remember hearing was from France). But in some of the important subsidiary matters France has shown us the way.

Here we still fail to grasp the nettle of "man-made" static firmly; and the worst of the sting has yet to be felt. In France the law has been empowered to deal with it. Again, the French seem to be taking a much more definite line with regard to certifying the safety of wireless sets. The Regulations drawn up by our own Institution of Electrical Engineers set a recognised standard; but decisions as to whether any particular make of receiver complies with these Regulations is left to the manufacturers themselves, who seem to me to be the wrong people to do it. I mean, it is rather unfair to the manufacturer who adheres faithfully to the letter and the spirit of the law when a competitor with a less tender conscience takes the name of the I.E.E. in vain. This is not at all a theoretical criticism, unfortunately.

It is true that even the daily Press has not found very many cases of disaster due to broadcast receivers over which to gloat. We do not have a weekly headline: "The Toll of the Loud Speaker" or see graphs of the fatalities. But tragic results are not unknown, and lesser mishaps are fairly common; so there is good reason to insist on as high a standard of safety as is reasonably possible.

Simplicity of Safety

Timid and aged listeners, possessed by a fear that the whole contraption is liable to blow up at any moment, are not likely to be assured by any precautions. But it is quite easy to make all risks extremely remote. The trouble is that competition is intense, and there is a temptation to take a chance and miss out some little component that in 99.99 per cent. of the production will be wasted.

There are three risks that need be considered—fire, lightning, and shock. Of these, I personally confess to very little respect for lightning, and even less respect for the safety devices commonly adopted. Possibly as many sets as one per million are struck by lightning annually. I have no definite information on the subject, but I fancy that the unlucky ones are not usually of the urban type, crowded among a lot of much more prominent erections. Readers whose aerials are landmarks for miles around may find it worth while looking to see what is covered by their insurance policies.

If receivers were among the things that are left working when one is out of the house it seems likely that quite a number of serious fires might well result. Smoke, and even flames, have issued from many sets; but there has usually been someone close at hand, attracted by the cessation of programmes. (In some homes the wireless set is "heard" only when it stops working.) If a short-circuit takes place in the mains transformer, or in the smoothing condensers, an excessive current is liable to flow and to produce enough heat to set the receiver on fire. Suitable fuses in the mains circuit are a valuable protection against this, but it is not sound policy to skimp the quality of components and workmanship and then trust to fuses if the worst happens. Moreover, it is quite difficult to provide a fuse which is never blown by the surge of switching on, yet which infallibly cuts off the supply whenever things go wrong.

Ordinary Precautions

Apart from fitting fuses and reliable components, the manufacturer can diminish the fire risk by designing everything to have such a margin of safety that in the least favourable circumstances nothing gets dangerously hot. The I.E.E. Regulations specify some of the things that are desirable in this regard. But however well the manufacturer does his job, the installation cannot be considered safe if the user runs a connection to the mains in such a way that it is liable to cause a short-circuit—for instance, by running a piece of ordinary flex under the carpet. The current will probably be cut off instantly by the house fuse, but not before intense heat has been generated—enough to melt any metal. If the switch on the receiver itself is used—a convenient but questionable practice—the flex may "blow up" when there is nobody near, and then the fat (and probably everything else) is in the fire. Give the flex connections an occasional inspection to see that they are not worn or frayed anywhere; remembering also the point where they are led into the cabinet. And if the set develops a fault, do not leave it on without investigating.

So much for fire. The I.E.E. devotes the greater part of its Regulations to avoiding possibility of shock. Those who are accustomed to handling electrical apparatus are inclined to regard electric shocks as a great joke, particularly if somebody else gets them; but in the home one has to remember that individuals much younger and much older than oneself may be more curious, less discriminating, and more unpleasantly affected by shock. Considering that a peak voltage of 1,000 volts or so is usual in the transformers of A.C. models, and that much less may prove fatal, the need for some care is not altogether grandmotherly. The connections to energised loud speakers are likely to have 350 volts between two of them, and a general HT pressure of 250 volts is practically standard. Even among manufactured sets of reputable origin it is common for these parts to be quite accessible with the power switched on. Actually there is not much to complain about if recessed loud speaker sockets are used and the wiring is properly carried out; but I should prefer to stand with the I.E.E. in this matter and isolate the loud speaker terminals by a transformer or condenser.

With D.C. or "Universal" receivers it is hardly possible to be too careful. The "inner structure" (to use the I.E.E phrase) is bound to be in direct contact with the mains, and what is usually considered to be the earth or safe side has a fifty-fifty chance of being fully live. And yet many such sets are sold with no isolation whatever for the loud speaker and other connections. It is taking a big risk. All the metal parts that can be touched—aerial, earth, pick-up and loud speaker sockets and external screw-heads—should be definitely isolated from the mains.

TUNING DIAL IDEA FROM FRANCE

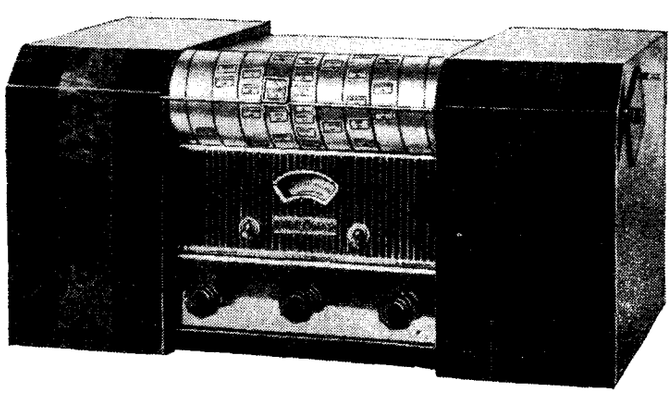

A NEW French receiver, "Radio-Star," incorporates a tuning dial of unusual interest. A drum with a spiral groove is rotated by means of the handle on the right to control tuning, and a small window which follows the groove shows the name of the station to which the set is tuned. The window moves along a rod in front of the drum.

Current Topics

EVENTS OF THE WEEK IN BRIEF REVIEW

Germany's Six Million

GERMANY has at last passed the six million radio licence figure with a total of 6,142,921 on January 1st. This is an increase of 231,591 over the December figure.

During 1934 the number of registered listeners increased by 21.6 per cent.

New Air Control Stations

AIR travel around Britain and across the Channel will be easier and safer when two projected new radio telephony equipments at Lympe (Kent) and Pulham (Norfolk) are completed. These stations will share with Croydon the responsibility of directing aircraft. Owing to the increase in air traffic calls during foggy weather have been so numerous that pilots have had to wait for bearings.

Viceregal Radio Scheme

INDIA'S most powerful broadcasting station will shortly be erected at Delhi by order of the High Commissioner for India in London. The contract has been placed with the Marconi Co.

This is the first step towards the accomplishment of the Indian Government's policy of extending broadcasting in India as announced by the Viceroy in August last year.

Radio in the Saar

IT was officially announced last week, prior to the Saar Plebiscite, that the German broadcasting organisation "immediately after the return of the Saar territory to Germany" would begin the construction of a Broadcasting House in Saarbrücken.

German Radio Show

THE Berlin Radio Show for 1935 will be held from August 16th to 25th.

Prizes for Amateur Research

SEVEN amateur experimenters have just received awards from the Radio Society of Great Britain in recognition of valuable contributions to radio science made during the past year.

Several advanced types of research work have been investigated, among which are the development of a short-wave receiver which gives only one image on each side of zero beat (and thus halves at a blow the interference problem on the higher frequencies), or a directional aerial for 5-metre work and of the use of an HF pentode as a frequency divider.

The Radio Roosevelts

PRESIDENT ROOSEVELT spoke on the radio twenty-three times during 1934, and since he took office in March, 1933, he has been heard forty-one times, reports the National Broadcasting Co. Six of these broadcasts were his well-known "fireside chats." All these chats and most of his speeches were carried over the major networks, including during the latter part of the year the newly established American Broadcasting System.

Mrs. Roosevelt exceeded the President's radio appearances by speaking twenty-eight times during the year, or a total of forty-five times since the beginning of the administration.

Perfection at Last

HERR JAENISCH, the Berlin news announcer, claims that he has never made a mistake at the microphone since he assumed his arduous duties on January 1st, 1925. According to our Berlin correspondent, listeners greatly appreciate the manner in which Herr Jaenisch handles the news items, his voice never betraying emotion.

Do You Know Irish ?

THREE months search by the Civil Service Commissioners of the Irish Free State has not discovered a suitable candidate for the £900-a-year post as director of broadcasting. The necessary qualifications include a conversational knowledge of at least one Continental language, experience of musical and theatrical organisation, music, drama, Irish culture, literature and history. But the main stumbling block has been the necessity for a knowledge of Irish.

Ten is Lucky

THE Breslau station, which has recently encouraged the nonagenarian habit by broadcasting selections chosen by listeners of ninety years of age and over, now undertakes to congratulate by name all mothers who have had ten children.

Laughing at 8.45

LATE risers apparently need cheering up just as much as the early birds, so the Deutschlandsender has decided that the morning humorous transmissions beginning at 5.30 shall be extended to 8.45.

Famous Conductor on "High Fidelity"

IT is rare for musicians to discuss broadcasting in terms of frequency range, but Leo Stokowski, the famous conductor of the Philadelphia Symphony Orchestra, reveals a shrewd understanding of the limitations and possibilities of radio in the January issue of the *Atlantic Monthly*.

Regretting that "music comes from the radio in incomplete and changed form" because some of the harmonics or overtones are lost, he expresses the hope that high fidelity radio receivers and transmitters will soon accommodate frequencies from 30 to 13,000 cycles.

Stokowski has great faith in the new electrical musical instruments, and believes that they may greatly influence musical compositions of the future.

Private Radio Censorship

TO preserve the moral standard of broadcast transmissions in France, a League has been formed, with its chief branch in Paris, under the name of "Radio Families." Members are being recruited from all creeds and classes with the common aim of ensuring that all broadcast transmissions shall be suitable for reception in the ordinary home.

Applied Physics

FROM Switzerland comes the story of a number of pupils in a well-known school who, wishing to know what subjects were chosen for essays on the eve of the examinations, hid a microphone in the stove of the council hall where the teachers were making their choice. Unhappily for the lads premature frost necessitated a fire in the council hall and the microphone was discovered.

The boy who installed the microphone was solemnly awarded the first prize for applied physics and expelled from the establishment.

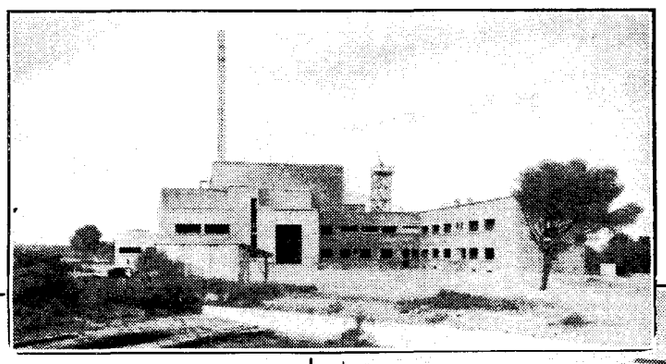

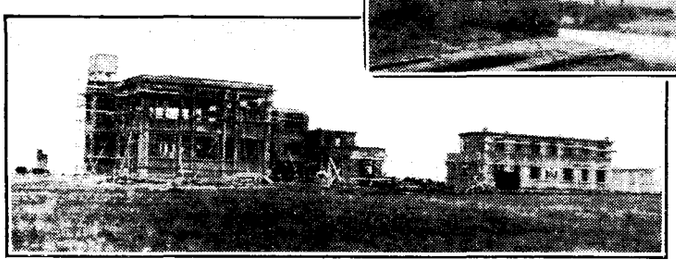

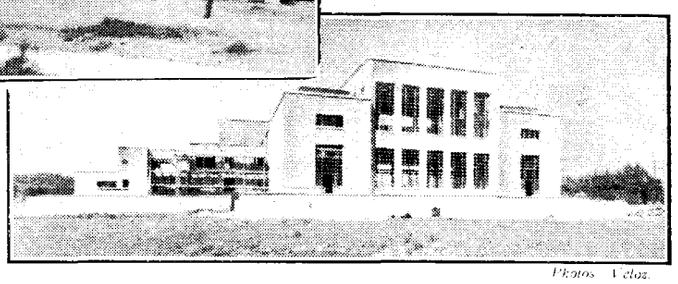

Photos Veloz.

THE FRENCH HIGH-POWER REGIONAL SCHEME is rapidly approaching completion; certain stations are about to begin testing. These recent photographs show (above) the station building for Marseilles-Realtor, 100 kilowatts, testing in June next; (left) Toulouse-Muret, 120 kilowatts, testing this month; and Nice-La Brague, 60 kilowatts, expected to start tests in February or March.

RESISTANCE-COUPLED AMPLIFIERS

Valve Operating Conditions

(Concluded from page 28 of last week's issue)

By W. T. COCKING

IF distortionless amplification is to be secured with resistance-capacity coupling, it is necessary to pay at least as much attention to the voltages which are applied to the valve as to the values of components. It is shown in this article that great care is necessary in selecting the operating conditions of the penultimate valve.

THE conditions necessary for a minimum of frequency distortion in a resistance-capacity coupled amplifier were dealt with last week, and it was shown that the values of components often depend largely upon the internal AC resistance of the valve. Where the valve is of low resistance, however, it was pointed out that there is no optimum value for the coupling resistance from the point of view of frequency distortion, and that a choice should then be made for minimum amplitude distortion. We have, therefore, to settle the best value for this resistance.

Two factors must be known before the conditions can be determined—the maximum output required and the maximum harmonic content to be allowed. The maximum output will be equal to the maximum input required by the next stage, and if this includes a PX4 valve we shall need about 35 volts peak. The distortion should obviously be kept as small as possible. A total of 5 per cent. harmonic distortion is often considered permissible, but if we accept this figure we must not forget that it represents the total distortion of the whole apparatus. If we allow 5 per cent. distortion in each stage, we shall find severe distortion when all stages are considered together. It is necessary, therefore, to keep the distortion in individual stages at a minimum, and the writer suggests that it should not exceed 1 per cent.

Dynamic Characteristics

The method of calculation best adapted for the determination of the operating conditions is graphical and is best demonstrated by an example. Suppose we have an MHL4 valve, which has an AC resistance of some 10,000 ohms under working conditions and an amplification factor of 20, and we wish to drive a PX4 valve from it with an HT supply of 215 volts. It was shown in the previous article that with such a valve we can use any value of coupling resistance without fear of frequency distortion. We have, therefore, to find the most suitable value of coupling resistance for an output of 35 volts peak, with not more than 1 per cent. distortion. This is most easily done by approximate calculation, after which the results can be checked by a single accurate calculation.

We require a set of anode volts—anode current curves of the valve—and these are shown in Fig. 1 for the MHL4 valve. The first step is to mark off the voltage available, in this case 215 volts, at V; then assume some value of coupling resistance, say 10,000 ohms, and mark off a point I on the current scale equal to the current which would flow if the whole voltage were applied across the resistance. For these conditions, it is 215/10,000 = 0.0215 A. = 21.5 mA. Join the two points V and I by a straight line, then the intersections of the line with the valve curves enable the actual anode current and anode voltage of the valve to be read off for the case when the coupling resistance is 10,000 ohms and the HT supply 215 volts. If the HT voltage is different, then it is only necessary to draw a line parallel with IV, cutting the voltage scale at the new voltage in order to determine the new conditions.

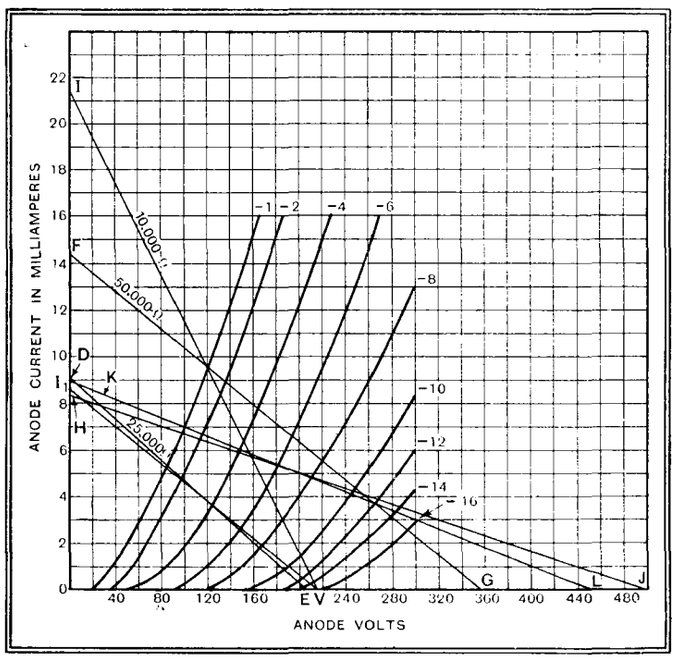

Fig. 1.—The anode-volts anode-current characteristics of an MHL4 valve, together with a number of load lines.

Although everything can be determined directly from this diagram, it is usually more convenient to plot the dynamic characteristic of the valve and use this to determine the output, amplification, and distortion. This may be done by plotting the actual anode voltage of the valve against grid voltage, as in Fig. 2. It can be seen that at −1 volts grid bias the actual anode voltage is 120 volts, while at −2 volts it is 131 volts, and so on.

The amplification obtained can be read off directly from this curve and is equal to the change of anode voltage for a change of 1 volt in the grid potential; thus at −1 grid volts the anode voltage is 120 volts, and at −2 volts it is 131 volts, so that the amplification is 131-120 = 111 times. This is slightly greater than the value which would be calculated from the formulæ in the previous article assuming the valve to be of 10,000 ohms resistance, and to have an amplification factor of 20, and the discrepancy is to be accounted for by the fact that under these particular operating conditions the valve resistance is a little lower than 10,000 ohms. It must be emphasised that the valve resistance always varies somewhat with the operating conditions.

Now we require an output of 35 volts from the valve, and we cannot operate the valve at a grid potential less negative than some 1 volt on account of grid current. A peak output of 35 volts means that the anode potential must vary between 120 volts (the value for −1 volts grid potential) and 155 volts (the points A and C on Fig. 2), during the positive half-cycle of input, so that the point C corresponds to the grid bias, and we see that −4.3 volts is needed. The input is consequently 4.3 − 1 = 3.3 volts peak and during the negative half-cycle the grid swings to −7.6 volts and the anode potential becomes 185 volts, corresponding to the point B. We now see that the positive half-cycle of input causes a change of anode potential of 35 volts, but the negative half-cycle causes a change of only 30 volts. Amplification, therefore, is not distortionless.

The percentage second harmonic distortion can be calculated from the formula $D = 100\ \{(E_{max.} + E_{min.})/2 - E_{cor.}\}/(E_{max.} - E_{min.})$ in which $E_{max.}$ and $E_{min.}$ and respectively the maximum and minimum anode

Resistance-coupled Amplifiers—

voltages and $E_{nor.}$ is the anode voltage at normal grid bias. In this case we have $E_{max.} = 185$ volts, $E_{min.} = 120$ volts, and $E_{nor.} = 155$ volts; the distortion, therefore, is $\frac{100\{(185 + 120)/2 - 155\}}{185 - 120}$ $= 5.55$ per cent.

This, obviously, is not good enough for our requirements, so let us repeat the calculation for a load resistance of 25,000 ohms. The load line on Fig. 1 now becomes V I1, and at first glance one would expect more distortion since the line cuts more into the curved portion of the valve characteristics. This is not necessarily the case, however, for the distortion depends chiefly upon the ratio of the load resistance to the valve resistance. The distortion is due largely to the variations in valve resistance with grid voltage, causing variations in the amplification, and this can be made small by using a sufficiently high value of coupling resistance. We now have a fresh dynamic curve A1, G1, B1 to plot in Fig. 2 for the new load resistance.

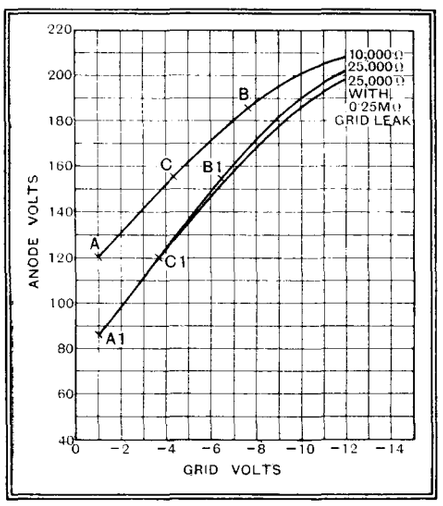

Fig. 2.—The dynamic characteristics showing the straightening effect of a high resistance load.

The anode potential for -1 volts grid bias is now 85 volts, so that the grid bias must be chosen to give $85 + 35 = 120$ volts steady anode potential, for an output of 35 volts peak: the grid bias, therefore, must be 3.7 volts, and the input required is 2.7 volts peak, so that the amplification has increased to 12.95 times. The negative half-cycle of input thus reaches $2.7 + 3.7 = 6.4$ volts, and we can read off the values of anode voltage under operating conditions; we find that $E_{max.} = 154.5$ volts, $E_{min.} = 85$ volts and $E_{nor.} = 120$ volts. The distortion, therefore, is $100\{(154.5 + 85)/2 - 120\}/(154.5 - 85) = 0.36$ per cent. This is such a satisfactorily small value that we need proceed no further and we can settle on 25,000 ohms as a satisfactory value of coupling resistance.

Now this calculation has been only approximate, for we have ignored the effect of the grid leak in parallel to the coupling resistance. The load line to *direct* current will still be VI1 in Fig. 1, but the line for AC will be different. If the grid leak is 250,000 ohms, and the coupling resistance 25,000 ohms, the effective load to AC will be 22,700 ohms. Although the DC conditions are still accurately represented by VI1, we must draw a new load line for AC conditions through the intersection of VI1 with the grid bias we intend to use. The amplification with the new load will be slightly less than that previously calculated so that we shall require a little larger input to the valve to maintain the output and an appropriately greater grid bias unless we permit the grid to run slightly more positive than -1 volt. This is probably permissible in this case, since the change is very small. The new load, therefore, can be drawn for a bias of -3.7 volts and takes the form DE on Fig. 1. A new dynamic curve can be drawn in Fig. 2, but over the working part of the characteristic the change is exceedingly small, and we can neglect it.

Decoupling

It can be seen, however, that if the coupling resistance and the grid leak are comparable in magnitude the difference between the AC and DC conditions will be great, and the distortion tends to be higher than would be the case with identical DC and AC conditions, and the calculation of the circuit tends to become tedious. It is good practice, therefore, to limit the value of the coupling resistance to about one-tenth of the grid leak resistance, and as the latter is usually limited to 250,000 ohms preceding an output valve, we fix on 25,000 ohms for the coupling resistance. It will be readily seen that this value is in no way critical; it should not be lower, for this will increase distortion, but it can be made higher without ill effects.

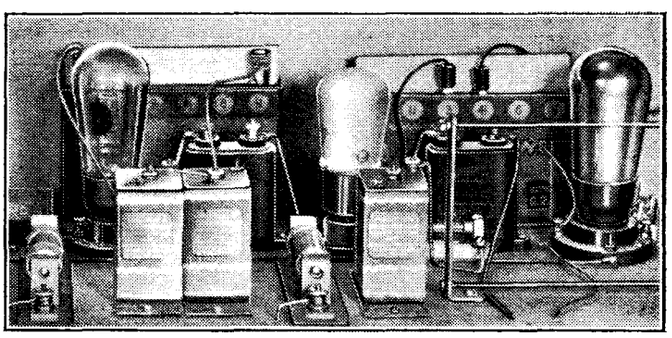

A portion of a laboratory amplifier of the battery-operated type.

The effect of a decoupling resistance can be allowed for in the same way as a grid leak, for its only effect is to make the DC load higher than that for A.C The use of decoupling, therefore, reduces the voltage handling capacity of a valve or increases the distortion. Decoupling is necessary, however, so its effect must be compensated by an increase in the HT voltage. In the example quoted, the HT supply was taken as 215 volts, and the curves show that under the selected operating conditions the anode current is 3.7 mA. If a decoupling resistance of 10,000 ohms be used, therefore, the voltage drop across it is 37 volts, so that an HT supply of $215 + 37 = 252$ volts should be used. The grid bias is 3.7 volts and with a current of 3.7 mA. the bias resistance can be 1,000 ohms, and the total HT supply $252 + 3.7 = 255.7$ volts.

The complete stage thus takes the form shown in Fig. 3, and the valve requires a total supply of 255.7 volts at 3.7 mA.,

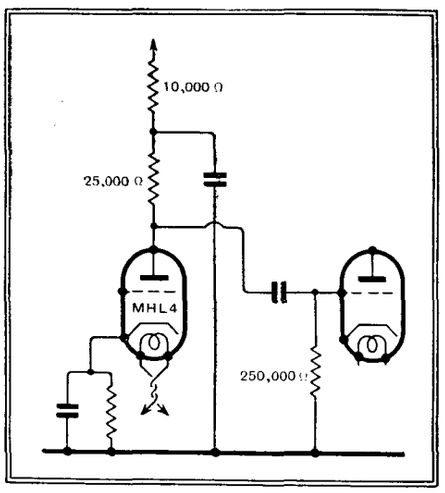

Fig. 3.—The circuit diagram of a resistance coupled stage.

and gives an output of 35 volts peak for an input of 2.7 volts peak, with second harmonic distortion of only 0.36 per cent.

The conditions taken as an example are those actually adopted in *The Wireless World* Push-Pull Quality Amplifier. The treatment to be adopted varies in different cases, but follows the general lines laid down. Where a definite limit is set to the coupling resistance by frequency distortion, this should normally be used, and sufficient undistorted output obtained by the use of a high enough HT voltage.

This condition of output is most important, and is one which is not sufficiently appreciated. It has been found that some builders of the Push-Pull Quality Amplifier wish to modify the output stage for a greater output. There is no objection whatever to the use of valves of the PX25 class in the output stage, for they require no greater signal input than the PX4 type and the operating conditions of the preceding stage are undisturbed. In order to make use of existing equipment, however, some builders have wished to use LS6A type valves and this cannot be done. The LS6A require an input of 93 volts peak so that the preceding stage

Resistance-coupled Amplifiers—

must give this output, and a glance at the curves of Fig. 1 shows the MHL4 to be totally incapable of doing this without distortion even when operated at its maximum rated anode potential and used with a high-load resistance, conditions which would necessitate an HT supply of many hundreds of volts.

Maximum Output

With resistance coupling, no valve can possibly give a peak output greater than its anode voltage, and in practice the output obtainable is rarely more than one-half of the anode voltage. In cases where freedom from amplitude distortion is important it is unsafe to reckon on obtaining more than one-third of the anode voltage as output. The maximum output from any triode rated for 200 volts anode supply is thus about 66 volts peak. The matter is not made any easier by the choice of a lower resistance value, for the voltage output is limited by the ratio of coupling to valve resistances and by the anode voltage of the valves.

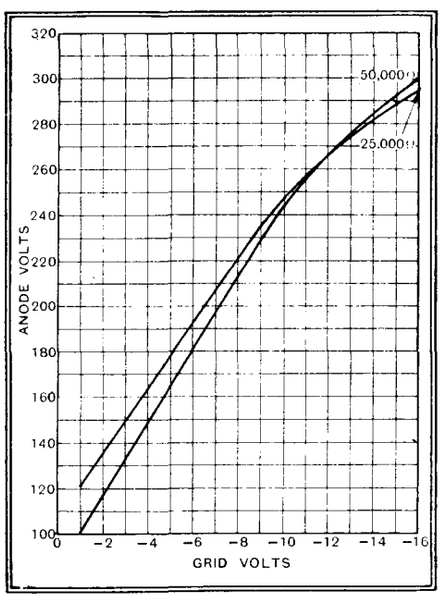

Fig. 4.—The dynamic characteristics of the MHL4 with loads of 25,000 ohms and 50,000 ohms and a high anode voltage.

It is quite possible to drive an LS6A from an MHL4, but the distortion will be appreciable. As the case is of some interest in view of the recent introduction of the PX25A valve which requires an input of 100 volts peak, it will be as well to calculate the distortion likely if an attempt be made to feed it from an MHL4 valve with resistance coupling. Let us, therefore, examine the conditions when the valve is used with a 25,000 ohms coupling resistance and with an anode potential of about 200 volts.

The load line is FG in Fig. 1, and the dynamic valve curve is shown in Fig. 4, and to obtain a peak output of 100 volts it can be seen that the bias should be -8 volts and the input 7 volts peak. The anode potential is then 221 volts, for the 100 volts output cannot be obtained with a lower voltage without running into grid current. The limits of the input swing are marked on the curve, which can be seen to be far from straight. Actually, the distortion is 9.7 per cent., far too much for good quality. Even with this distortion, an HT supply of 357 volts is needed without allowing for decoupling. With a decoupling resistance of only 5,000 ohms, 32 volts would be dropped in it and 8 volts are needed for bias, so that the HT supply would be 400 volts. When using a PX25A, however, 500 volts are likely to be available, so that we can improve somewhat on the above.

If we strictly observe the makers' rating and keep the anode at 200 volts, it can be seen from Fig. 1 that the load resistance must not be less than 50,000 ohms. The DC load line is HJ, of value 60,000 ohms, and the AC line is KL, of 50,000 ohms. The dynamic curve is then shown in Fig. 4, and the bias can be seen to be -7.2 volts, the input is 6.2 volts peak, and the distortion is 11.1 per cent. Thus, although we have increased the load resistance, the distortion has increased slightly because we have kept strictly to the valve makers' rating for the anode voltage. Similar calculations with other valves show similar results, and it will be found that the voltage output obtainable from such different valves as the MH4, the MHL4, and the ML4 is of the same order. To operate an output valve of the PX25A or LS6A type with resistance coupling, the preceding valve must be run with an actual anode potential of 250 to 300 volts, and no indirectly heated triode with such a rating is yet available. The correct precedure when using such output valves is to use transformer coupling, for then only about one-third of the output is necessary.

Enough has been said to show the fallacy of supposing that resistance-capacity coupling is always distortionless. It requires careful design if it is to show any improvement over other couplings. It has been shown in these articles, however, that this design is by no means difficult if one does not essay the impossible —to attempt to obtain too great an output from the valve.

It should be pointed out before concluding that an error occurred in the table of formulæ which appeared in the first part of this article. The meaning of the symbol ω was given as 3.14 times frequency instead of 6.28 times frequency.

Random Radiations

By "DIALLIST"

The Television Report

WE are all anxiously awaiting the publication of the report of the Committee appointed to inquire into the development of television in this country of ours. Numerous anticipations of its contents have appeared, but it is quite likely that some of them may be found rather wide of the mark.

For one thing the Committee spent a certain amount of its time in travelling rather than in sitting. One part of it visited the United States; the other betook itself to Germany. In both of these countries some remarkable work has been done recently in television and I had a very interesting talk the other day with an American who has been intimately concerned with recent experimental work.

From him I learned that in the U.S.A. a great deal has been done with what we may describe as super high-definition television. All the demonstrations that I have seen in this country have been made with the 180-line process, though the 240-line has, I believe, been used experimentally. In America as many as 360 or even 480 lines are used in experimental work and my friend told me that when a television service is inaugurated over there he fully expects that nothing less than 360 lines will be used.

Low, Medium and High Definition

Low-definition or 30-line television is the very best that can be done on the medium-wave broadcasting band. I have never regarded it as being of the slightest entertainment value, however interesting it may be in the laboratories. In view of the developments which have taken place of late, the 180-line system should, perhaps, now be described as "medium definition." I don't think that I shall be doing it an injustice if I say that its pictures are about as good as those shown by an amateur ciné film projector slightly out of focus.

To give a concrete instance of what it can do; were the front cover of this issue televised, the large-type words, "Wireless World," would be about all that would be really legible.

With 360 lines the words "The Practical Radio Journal" and "Covering Every Wireless Interest" could be read. With 480 lines the title of the principal article at the top of the page would be legible and possibly even the date of the issue—not that in the top left-hand corner, but that which appears immediately above the advertisements.

My own forecast is that the report will recommend that a start be made in this country with 180 lines, but that we shall change over fairly soon to transmissions of much higher definition.

Too Many Break-downs

ONE cannot help feeling that break-downs in receiving sets bought ready made are still of much too frequent occurrence. Myself, I can see no reason why the wireless receiving set should not be just as reliable and just as immune from break-downs as any other piece of domestic electrical apparatus.

Your refrigerator does not die on you; nor does the vacuum cleaner, the electrically driven sewing machine, the hair-dryer, the toaster or the fan. But after all these years the wireless receiving set retains its proneness to let its owner down in the most unexpected and unwelcome way. Correspon-

Random Radiations—

dents send me particulars of large—far too large—numbers of these break-downs and an analysis of them shows that they are due to five main causes.

The first is valves, and there is very little excuse for this nowadays. Next come mains transformers and output transformers whose windings are apt to burn out or to develop the melancholy "dis" for no apparent cause. Fixed condensers come next in order of demerit and they are followed closely by resistors. Lastly, we have the wave-change switch, which all too frequently goes out of action.

These things simply should not be. It is high time that manufacturers realised that a large and busy service-after-sales department is *not* a thing to boast about.

This Battery Business

THE Ever-Ready Company has certainly thrown a bombshell into the battery world by launching a very cheap range of H.T.Bs. bearing its name. The Company's reason for taking this line of action is that it wants to clean up the radio battery position.

For years past there has been a deluge of cheap-jack high-tension batteries of very doubtful pedigree, some foreign made and some of British origin.

Aims and Methods

The Company's declared aims are excellent, but I cannot help feeling that since you can now buy for six shillings a 120-volt battery bearing one of the best known names in the trade, the man-in-the-street is bound to jump to the conclusion that six shillings is as much as anyone ought to pay.

The net result, I fear, may be that the battery of higher capacity will almost disappear and that the cheap type will reign in its stead.

This is something more than a pity. If the cheap battery becomes the standard article set designers will find their style very seriously cramped, for they will have to sacrifice efficiency and quality of reproduction to economy in high-tension current consumption.

Given a H.T.B. of adequate capacity, the battery set can be very nearly as good a performer as its mains counterpart. But if designers have to base their sets on the small, cheap high-tension battery, progress, as the traditional Irishman put it, can only be in a backward direction.

The Art of Flat Catching

IT is astonishing to find what a large proportion of the public can deceive itself into believing that you can obtain something for nothing, even though in its heart of hearts it knows perfectly well that you can't. I remember when I was a boy the starting of a new branch of a multiple store in a provincial town. Business was not too brisk at first, even though butter was offered at elevenpence a pound as against a shilling charged by other shops.

Then the manager had an inspiration. He offered a pound of butter, plus a free half pound for 1s. 6d. As soon as the shop opened there was a rush of purchasers and within an hour the queue extended half way down the street.

I am quite sure that if any wireless manufacturer raised the price of his sets by ten shillings and offered free receiving licences he would do record business.

Something for Nothing

As it is, numbers of flat-catching gadgets appear from time to time on the market and sell like the proverbial hot cakes. Do you remember one a year or two ago which undertook to put new life into run-down high-tension batteries? It consisted of nothing more than an arrangement whereby a 2-volt accumulator could be wired in series with the H.T.B. Yet the most glowing testimonials were received from users; some of whom described how dead batteries had been brought to life again and, subsequently, gave months of excellent service.

Another most effective way of attracting business is to offer out of date or dumped sets at a pound or two above their normal price and to make "generous" allowances for old receivers given in part exchange.

Records and Broadcasting

HITHERTO, I believe, the B.B.C. has been able to broadcast records without paying a royalty fee, the idea being that the publicity given was of great value. Undoubtedly, it is, but I hear that negotiations have been started with a view to obtaining modest royalty payments.

Some artistes are feeling more than a little sore about the broadcasting of records for quite another reason. Some months ago, Mr. James Foran, the famous Australian tenor, arrived in this country and asked for an audition. After hearing him, the officials concerned told him that his voice was not suitable for the microphone.

So that was that, or it might have been, had not Mr. Foran switched on his wireless set a week or two later and found that he was listening to his own voice coming off a record. You may imagine that he felt pretty hot under the collar and he is not the only artiste who has had this experience.

The B.B.C's explanation that a voice may be found suitable by one department and unsuitable by another seems to me rather like adding insult to injury.

Non-radiating Trolley Buses

IT is good to hear that interference suppressors are to be fitted to the whole fleet of trolley buses run by the London Passenger Transport Board. At present the Board has only some sixty of these buses, which are at work in South Eastern districts of London. It has, however, powers to replace all or any of its existing tramway services with trolley buses.

There can be little doubt that as time goes on trams must give way to trolley buses and it may be taken for granted that any future vehicles that come into operation will be rendered innocuous so far as interference with wireless reception is concerned.

How powerful a distributor of interference the trolley bus can be only those know who live on or near routes on which it operates. It is largely used in many provincial towns and one hopes that the authorities responsible will not be long about following the good example set by the L.P.T.B.

AMATEUR TELEVISION TRANSMISSION

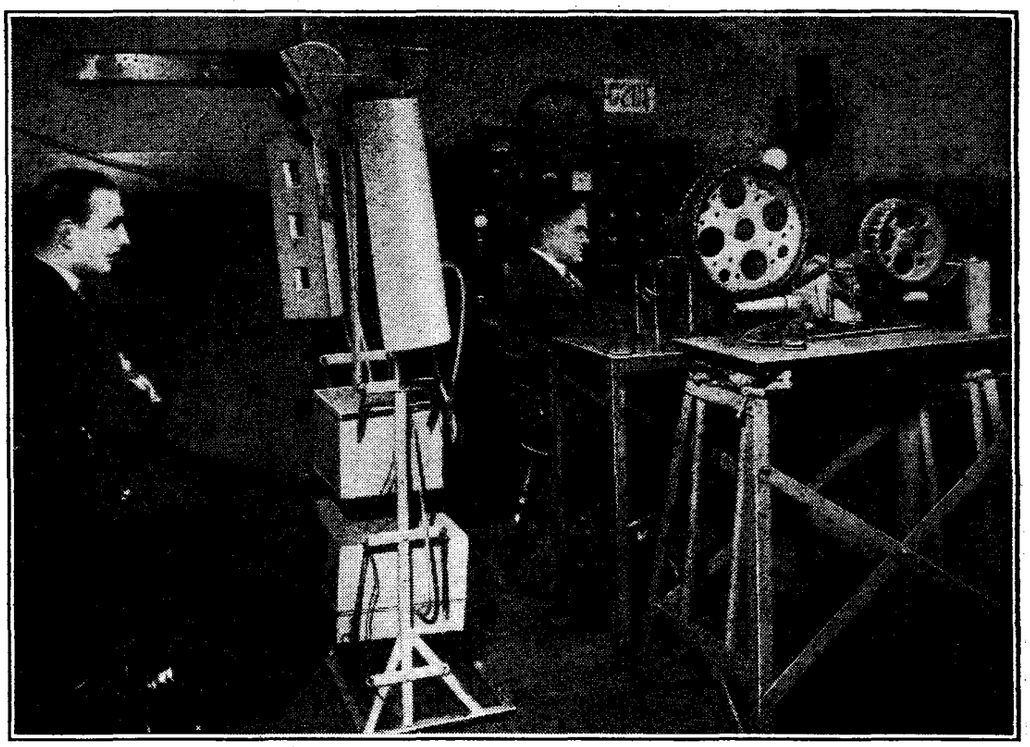

Television enthusiasts in the Manchester district are fortunate in that they have an additional programme to that transmitted by the B.B.C. G2UF, the station owned and operated by Mr. H. Bailey, of Denton, well-known for its regular transmission on the amateur wavebands, now leads the field with weekly 30-line broadcasts. Mr. Bailey is seen at the controls with an artiste facing the scanning equipment.

Foundations of Wireless

Part IX of the series under the above title will appear next week.

Listeners' G

Outstanding Broad

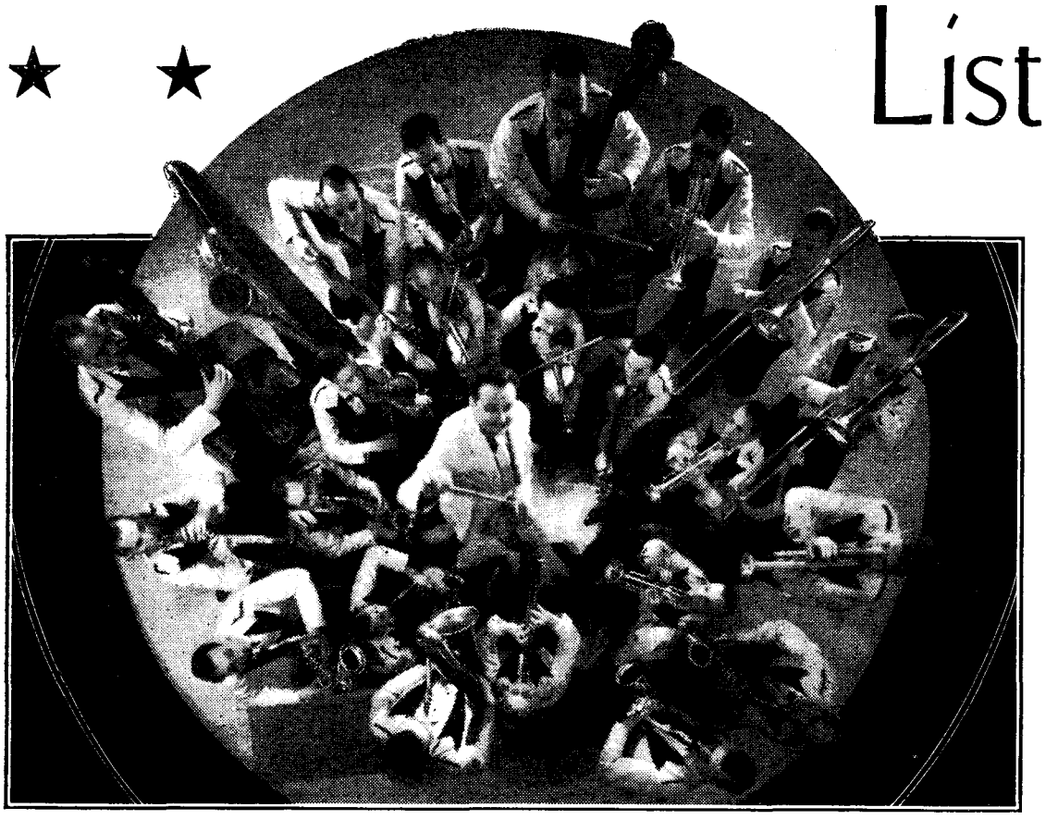

"SYMPHONY IN RHYTHM" on Monday evening (National, 8) brings Harold Ramsay and his orchestra to the microphone. Here is a first-floor view of this famous combination.

HOW WEEKS DIFFER

EACH programme week, good or bad, is distinctive, whether the B.B.C. wills it or not. Occasionally the balance is in favour of symphony music; at other times there is no evading sopranos and variety. The coming seven days seem to be remarkable for the number of small orchestral combinations engaged, and those who favour quality of reception above all other things will be glad. Many an item by an octet gives greater satisfaction to the musician at the loud speaker than the biggest of symphony orchestras whose efforts are held in with the bit and bridle of the control engineer.

NOT OVERWHELMING

DURING next week we shall hear Fred Hartley and his Novelty Quintet, Troise and his Mandoliers, the New London Trio, the Squire Celeste Octet, the Leslie Bridgewater Quintet, Reginald King and his Orchestra, and the Bernard Crook Quintet. Well assorted types, but having this in common: that they will not overwhelm either microphone or loud speaker.

THE SUNDAY EVENING FLAVOUR

THE B.B.C.'s Sunday orchestral concerts still retain a flavour of their own. I have attended performances in the No. 10 studio and also listened to them "on the air." The same quality can be noted at both ends—a quiet zest, probably born of the fact that both performers and listeners have profited by a day's rest.

Next Sunday's concert, which is conducted by Frank Bridge, opens with Haydn's Symphony No. 99 in E flat. I am glad that the conductor is including his own Rhapsody: "Enter Spring," which is a dashing and rousing creation really conjuring up the spirit of its title. A musical tonic.

NUTSHELL OPERA

THE studio operas of Radio Toulouse are always well done. On Sunday at 9, Gounod's "Romeo and Juliet" will be given, and on Tuesday at the same hour, Messager's "Veronique." On Wednesday at 10.30 the station broadcasts Offenbach's operetta, "Les Brigands," and at 10.30 on Thursday, Heymann's "The Girl and the Boy."

FROM THE SOUND TRACK

CLAYTON HUTTON'S extracts from talkie films are usually interesting. They are broadcast direct from the sound track. "Picture People" No. 4 will be broadcast at 7.30 (Regional) on Tuesday next.

AN ORIGINAL MIND

A CHAMBER opera by a composer of an original turn of mind will be broadcast at 8 o'clock on Wednesday next from Leipzig. The opera is "La Grançeola," and the composer Adriano Lualdi. Lualdi recently wrote an opera for marionettes, thus showing his interest in the serious possibilities of this revived art form.

HIGHLY PROMISING

A PROGRAMME containing such names as Clapham and Dwyer, Phyllis Robins, Elsie and Doris Waters could never be dull. All these and more are included in the "bill" for "Music Hall" to-morrow night (National, 8.30). Need I say more?

NOVELTIES

NEW Italian music will be heard when the Leipzig Symphony Orchestra broadcasts at 7.10 on Monday next. The solo pianist is Ornella Puliti Santoliquido and compositions by Malipieri and Pizzetti are on the programme. Another novelty this week is a programme of Icelandic music from Kalundborg at 8.15 p.m. on Wednesday. The orchestra will play an overture, "Iceland," by Leifs.

SHARING THE HONOURS

BROTHERLY love continues among the dance bands, and to-night (Friday) George Scott Wood and the "Six Swingers" give an hour's programme on the National wavelength, with Mantovini and his Tipica Orchestra.

I hope this policy of sharing the honours will become the vogue. Not only does it give the performers a rest, but it adds variety. Sixty minutes of the best dance band can be terribly boring.

YOUR TOWN AND MINE

ALTHOUGH L. du Garde Peach calls the broadcast "Our Town," his feature programme (Thursday, National, 8), the music of which has been composed by Ernest Longstaffe, purports to set forth the characteristics of his town, your town, and mine. In fact, it is prefaced by this rhyme:—

"'Tis not our town we show you to-night,
Not alone ours, though by us recognised,
But yours and every other whatso'er,
Wherever men do herd. . . ."

A large cast includes Lawrence Baskcomb, Miriam Ferris, Alma Vane, and Philip Wade.

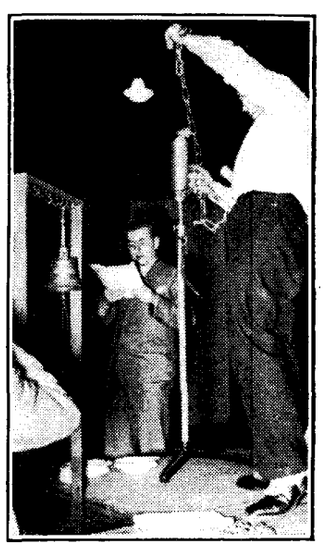

SOUND EFFECTS know no language, and the same devices are resorted to in German radio drama as by the B.B.C. A scene in the "effects" room at Berlin.

uide for the Week

casts at Home and Abroad

LATE MUSIC

FOR those who like their music late in the day there is a concert at 10.30 p.m. on Thursday, January 24th, broadcast by Radio-Paris, which includes d'Indy's Suite in D, and the Song Suite from Ravel's Schéhérazade, sung by Germaine Martinelli; and the same evening at 11.15 p.m. Radio-Toulouse broadcasts extracts from Delibes' "Coppélia," and "Trois petites pieces montees," by Satie.

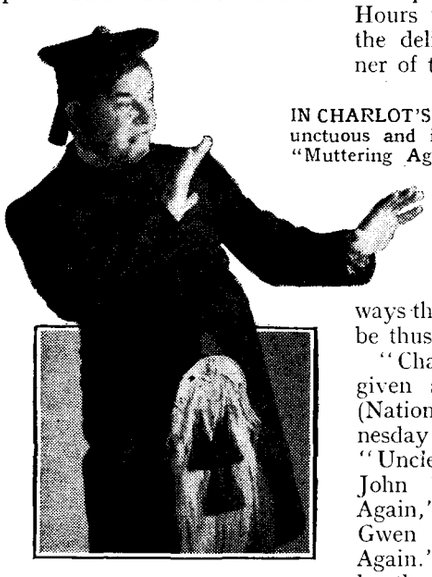

IN CHARLOT'S HOUR. John Tilley, the unctuous and irrepressible, who comes "Muttering Again" to Uncle Andre's party in the studio on Tuesday and Wednesday next.

A MUSICAL EXPERIMENT

QUITE an imaginative experiment is being attempted by the B.B.C. Music Department on Tuesday next, when, in a Debussy-Ravel recital broadcast by Sophie Wyss (soprano) and Adolphe Hallis (pianoforte) (Regional, 8.30), an attempt will be made to illustrate how the two composers treated similar ideas. Bells in the valley, high winds, hillsides—these and many other ideas were taken as subjects by both Debussy and Ravel, and in Tuesday's programme their efforts will be compared.

A SCHOOL PLAY

"GOOD-BYE, Mr. Chips," is the title of the fifty-minute play to be broadcast twice this week (Monday, Regional, 8; Tuesday, National, 8.40). It promises to be good. It has been written up as a radio play by James Hilton and Barbara Burnham from the novel of the former. The scenes are laid at Brookfield School in the Fen Country.

THE CHARLOT TOUCH

ANDRÉ CHARLOT is one of the rare spirits who have brought something new to the microphone. The Charlot Hours vary in brilliance, but the deliciously informal manner of their presentation is always the same. May it always be thus.

"Charlot's Hour" will be given at 10.20 on Tuesday (National), and 8.40 on Wednesday (Regional), when "Uncle André" will present John Tilley in "Muttering Again," and Nora Blaney and Gwen Farrar in "Together Again." In addition there will be the full Charlot Company and the B.B.C. Theatre Orchestra directed by Mark Lubbock.

FOREIGN VARIETY

SUNDAY evening need not be dull when we can listen to "Music Hall," a programme consisting chiefly of songs from operettas, at 8 o'clock from Radio-Paris, or take a microphone tour round "Gay Copenhagen" with the help of Kalundborg at 8.25.

"Neisser Konfekt," a variety programme from Neisse relayed by Breslau tomorrow from 7.10 to 9.0, should prove a good Saturday night's entertainment, as we are promised bon-bons in the forms of songs and music.

During the week Leipzig offers an International Variety Programme at 6 o'clock on Wednesday, January 23rd. It is called "Magicians of Laughter," and many famous clowns, including Grock, will seem once more to perform for our pleasure.

FOLK MUSIC

FOLK music occurs in several of the week's foreign programmes. At 6 o'clock this evening (Friday) Breslau offers a folk song feature called "Winter Sunshine on the Silesian Mountains." Two other folk music programmes are those from Kalundborg on Monday next at 8 p.m., which include Danish, Norwegian, Finnish and Dutch folk songs, and from Leipzig on Thursday at 5.25, when a festival programme of soloists on concertina, mandolin, lute, and even mouth organ will be relayed from Chemnitz.

THE JOCUND DANCE

IT is reported that Kemal Pasha at Angora has forbidden the broadcasting of Turkish music and compositions not in the European manner. This decision is no doubt part of the programme for making Turkey march with Western, rather than Eastern, civilisation; but it forms a strange contrast with the nostalgia that other nations appear to feel for the relics of their ancient cultural history. No other country attempts to blot out the past in this fashion. Even the Russians are devoting quite a lot of time to broadcasts of folk music; if you tune in the Moscow stations you may hear Morris dances.

PENN PORTRAITS. "Impressions of Famous People" will be broadcast by Ann Penn (above) with Navarre, at 8.45 on Monday (National).

THE AUDITOR.

HIGHLIGHTS OF THE WEEK

FRIDAY, JAN. 18th.

Nat., 8.30, "From One Dance Band to Another." 10, "India," by Sir John Perronet Thompson. 10.20, B.B.C. Concert of Contemporary Music.

London Reg., 7.30, "Hyde Park Corner" 8.45 "Azeff."

Abroad.

Brussels No. 1, 8, Gala Concert from the Conservatoire.

SATURDAY, JAN. 19th.

Nat., 7.30, Morris Motors Band. 8.30, "Music Hall."

London Reg., 7.30, Reginald King and his Orchestra 8.10, Conversations in the Train—III. 8.30, Recital by Antonio Brosa (violin) and Frank Mannheimer (pianoforte).

Abroad.

Milan, 8, Opera: "La Bohême" (Puccini).

SUNDAY, JAN. 20th.

Nat., 1.30, Violin Recital by Eileen Andjelkovitch. 7.15, Recital by Frank Osborne (pianoforte) and Alexandra Trianti (soprano). 9, Leslie Jeffries and the Grand Hotel Orchestra, Eastbourne.

London Reg., 4.30, B.B.C. Orchestra (Section E). Conductor: Julius Clifford. 6, Troise and His Mandoliers. 9.20, Sunday Orchestral Concert.

Abroad.

Vienna, 7.20, "The Gondoliers" (Gilbert and Sullivan).

All German stations, 8.30, "Master Concert."

MONDAY, JAN. 21st.

Nat., 8, Symphony in Rhythm by Harold Ramsay and His Band. 10, Chamber Music by the London Trio.

London Reg., 7.15, Squire Celeste Octet. 8, "Good-bye, Mr. Chips," by James Hilton and Barbara Burnham. 8.50, Music of the Oratorios.

Abroad.

Kalundborg, 7.30, Seventeenth- and Eighteenth-Century Music.

TUESDAY, JAN. 22nd.

Nat., 8, Organ Recital by C. H. Trevor. 8.40, "Good-bye, Mr. Chips." 10.20, Charlot's Hour.

London Reg., 7.30, "Picture People"—IV, produced by Clayton Hutton. 9.15, The Wireless Military Band.

Abroad.

Radio-Paris, 8, Opera: "Pélleas et Mélisande" (Debussy).

WEDNESDAY, JAN. 23rd.

Nat., 7.30, Reginald King and His Orchestra. 8.30, B.B.C. Symphony Concert at the Queen's Hall, Conductor: Albert Coates.

London Reg., 8, Chopin Recital from Warsaw. 8.40, Charlot's Hour.

Abroad.

Munich, 8.10, Radio Cabaret

THURSDAY, JAN. 24th

Nat., 8, "Our Town," by L. du Garde Peach and Ernest Longstaffe. 9, Brazilian music: gramophone selections introduced by Philip Guedalla.

London Reg., 8, "The Microphone at Large"—Stafford.

Abroad.

Radio-Paris, 8.45, Symphony Concert of Swiss Music.

New Apparatus Reviewed

Recent Products of the Manufacturers

FERRANTI MAINS TRANSFORMER

A MAINS transformer giving about 300 volts DC after smoothing at a load of 120 mA. is perhaps the most popular size used by home constructors as it allows a sufficient surplus voltage to energise a moving-coil loud speaker. The equivalent model in the Ferranti range is the type SV18, which is designed for use with a full-wave rectifying valve of the 350-0-350 volt 120-mA. class.

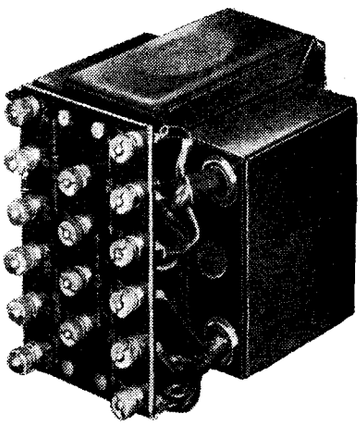

Ferranti type SV18 mains transformer.

In addition to a 4-volt winding giving 2.5 amps. for the rectifier's filament, the SV18 has three other LT windings; one is rated at four amps. and two at two amps each, and all are centre tapped. The voltage regulation of these windings is very good indeed, and even if one valve only is connected to the 4-amp. output it will not be damaged, as the voltage increase is but a shade over 5 per cent. On test, the 4-amp. winding gave 4.06 volts at one amp. and 3.85 volts at 4 amps., while the voltages of the two-amp. windings were 3.96 and 4.03 respectively, the former supplying two valves and the latter one valve. These measurements were made with the full load on the HT rectifier so that they represent actual working values.

The smoothed DC output, using a Ferranti R4 rectifier, a 4-mfd. reservoir condenser, a 250-ohm. smoothing choke followed by another 4-mfd. condenser, was 400 volts at 40 mA., 370 volts at 60 mA., 340 volts at 80 mA., 316 volts at 100 mA., and 300 volts at 120 mA. Over this range the AC on the rectifier's anodes changed by 7 volts only, namely, from 365 to 358 volts, or 1.9 per cent. Both halves of the HT secondary winding gave identical output voltages.

The transformer runs perfectly cool on full load and there is no audible hum from the core. A metal shield encloses the windings and the component is finished in the familiar high-gloss black enamel that characterises the products of Ferranti, Ltd., Hollinwood, Lancs. The terminals are large, well-spaced and clearly marked, and the primary is tapped for mains of from 210- to 240-volts at 50 c/s. The price is 42s. 6d.

DUBILIER OIL IMMERSED CONDENSERS

AN entirely new style paper-dielectric condenser for high voltage circuits has been introduced by the Dubilier Condenser Co. (1925), Ltd., Ducon Works, Victoria Road, North Acton, London, W.3. The dielectric material is specially impregnated, the whole is immersed in oil and enclosed in an hermetically sealed sheet-metal container.

The new model is known as the type 951 and is made in sizes of from 0.02 mfd. to 4 mfds., and for DC working voltages of from 1,000 to 2,000. This style has a very high insulation resistance and, furthermore, it is very compact, being much smaller than usual for a condenser of the same working potential. The smaller capacities are, therefore, eminently suitable for use as grid condensers in resistance-coupled amplifiers, while the larger sizes serve for smoothing and decoupling in high-voltage circuits.

The 0.02-, 0.1- and 1-mfd. sizes are rated for 1,500 volts DC working, 1-, 2- and 4-mfd. models are available for 1,000 and for 2,000 volts DC circuits and the test voltage of all models is twice the working potential.

Several specimens have been tested, and we are able to confirm the maker's claim that they have a very high insulation resistance; the capacities measured were all within 6 per cent. of the marked values, although the tolerance allowed is stated to be plus or minus 15 per cent.

The prices range from 10s. for a 0.02-mfd. size to 21s. for one of 4 mfd., 2,000 volts DC working; a 1-mfd. 1,000-volt condenser costs 11s. 6d. and a 2-mfd. of the same rating 13s.

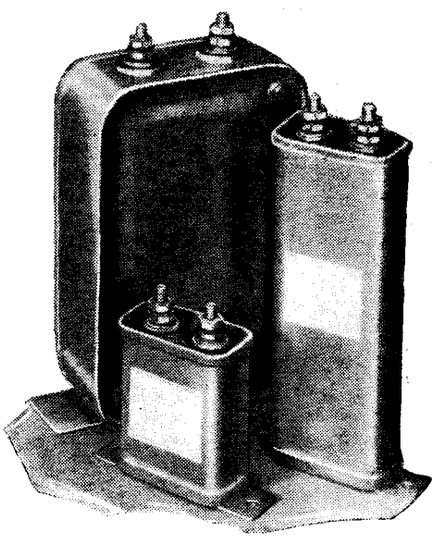

New Dubilier oil-immersed paper condensers. The group includes a 0.1-mfd. 1,500-volt type and a 2- and a 4-mfd. 1,000-volt model.

EPOCH MICROPHONE

FUNDAMENTALLY the Epoch Microphone is the same as a permanent magnet moving-coil loud speaker, only it is very much smaller, being fitted with a $2\frac{3}{4}$in. diaphragm. This has a centring device as in modern loud speaker practice and the whole is housed in a stout cast aluminium case approximately 5in. across. This is mounted in a swivel head on a short stand suitable for table use, but it can be supplied in a floor stand if required.

Although the output is small it is not much below the level of the average transverse current carbon-type, but there is no microphone hiss to contend with, so a high gain amplifier can be used and the background level will be governed mainly by the design of the apparatus.

The specimen tested has a good response without noticeable resonances over the major part of the audible range, though the output falls off below 75 c/s and above 5,000 c/s. This pattern has the advantage of being entirely self-contained as it does not require a polarising battery. A special transformer is needed which can be obtained separately for incorporating in the amplifier. The price is £4 4s. mounted in a table stand without the transformer, and £5 5s. including this component. A floor-type stand costs 21s. extra, and the makers are the Radio Development Co., Aldwych House, Aldwych, London, W.C.2.

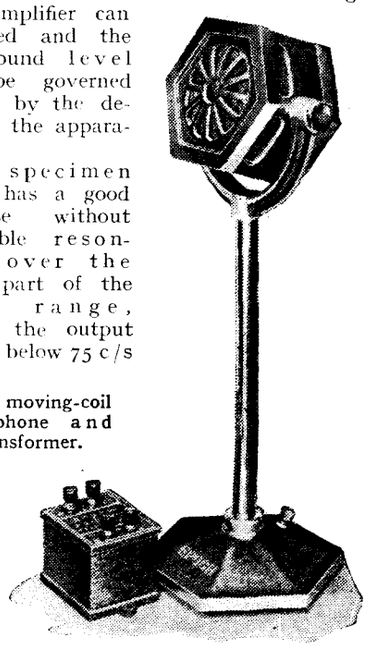

Epoch moving-coil microphone and transformer.

ROTHERMEL "TWEETER" KIT

R. A. ROTHERMEL, LTD., Canterbury Road, London, N.W.6, announce that they are now in a position to supply the R-155 "Tweeter" unit as a kit complete with coupling components and ready for connection in parallel with existing moving coil loud speakers. The additional components include a graded 25,000-ohm Centralab rheostat, a 0.05 mfd. non-inductive ballasting condenser, and two 1 mfd. feed condensers. The price of the whole unit, including the piezo-electric reproducer, is 32/6d.

Prices of cathode ray oscillograph equipment made by Standard Telephones and Cables, Ltd., have been substantially reduced. Address: North Woolwich, London, E.16.

BROADCAST BREVITIES

By Our Special Correspondent

£100,000

IT would cost the B.B.C. £100,000, so I am informed at Broadcasting House, to conduct anti-fading experiments at Droitwich on the lines of those about to be attempted in Germany. The latest system over there entails the use of a number of masts.

Quite wisely the B.B.C. prefers to watch results abroad before spending money on a similar experiment at Droitwich.

New Aerial Adjustments

Mr. Ashbridge's engineers lay stress on the fact that the opening of Droitwich has coincided with a genuine case of misbehaviour on the part of the Heaviside Layer, and strongly contend that all Europe's long-wave stations are suffering in the same way.

It is reassuring to know that Mr. Ashbridge is not allowing natural phenomena to cheat him of victory, and I can say that steps are being taken to improve the radiation of the new high-power transmitter. A number of aerial adjustments are now in hand.

The B.B.C. Knows

The performance of Droitwich has not been judged simply by letters from listeners. Engineers up and down the country, acting on instructions, have sent their reception reports to Head Office. Without doubt the B.B.C. is more conscious of the limitations of Droitwich than any individual listener.

This being so, and, knowing that the Corporation is never satisfied with a job half done, I believe that we may hope for better Droitwich reception in the near future.

Breakfast Broadcasting

THOSE who argue that the B.B.C. is unlikely to introduce programmes at 8 a.m. overlook the fact that every year since 1925 has seen extensions to the daily period of transmission. In the present Year of Grace programmes continue from 10.15 a.m. until midnight.

Now we know that 1935 is to be a "banner year," but how can this be achieved if, for the first time in its history, the B.B.C. does not extend the service? And if the service is to be extended, at what other time than before 10.15 a.m. could new features be introduced? By the process of elimination it could only be before 10.15.

These are questions which inspire hope in many supporters of an earlier daily start.

Wonderful Three Months

THE Silver Jubilee celebrations next May will give broadcasting yet another opportunity of proving its unique place in modern life. It is understood that the King will broadcast to the Empire, while the Dominion Premiers, who will be in London at the time, will be asked to contribute to the world-wide exchange of messages.

The celebrations will occupy the whole of the London Season, and already the B.B.C. Programme Department is busy with preparations for what should be a bumper three months.

WOMEN ANNOUNCERS have returned to favour in America. The National Broadcasting Company has just appointed to its announcing staff Miss Elsie Janis, the popular stage comedienne, and here she is being "interviewed" by some of her male colleagues.

Embarras de Riches

The trouble is that there are so many events from which to choose. It is certain that the Thanksgiving ceremony in St. Paul's Cathedral will be broadcast, as well as His Majesty's review of the fleet at Spithead.

The B.B.C.'s own contribution will probably take the form of a review of the King's reign.

A Lucky Discovery

IN the entrance hall of Broadcasting House I met Whitaker-Wilson, who has reconstructed the trial of Lady Lisle before Judge Jeffreys, for broadcasting in the "Famous Trials" series on January 28th and 29th.

He told me that his discovery of the contemporary account in the State Trials in the Guildhall was pure accident; he was looking for something else! But the frightful story gripped his attention, and he sat there in the Guildhall Library until he had read every line in it. Here, he thought, was something good enough for broadcasting!

Material for Drama

Lady Lisle was arraigned for high treason against King James II a fortnight after the battle of Sedgmoor, her offence being that of sheltering two refugees from the Monmouth Army.

Whitaker-Wilson has made it clear in his broadcast version that Jeffreys, though obviously a bully, carried out his bullying systematically and as a point of policy because he found he obtained more truth from lying witnesses by that means than any other. The trial, as a record of English methods in Courts of Justice in 1685, is something of a revelation, but it at least serves to show by contrast how far the treatment of witnesses has progressed.

It should also provide a highly dramatic broadcast.

Toscanini

The B.B.C. London Music Festival will be held in the Queen's Hall on May 10th, 17th, 22nd, 27th, June 3rd, 5th, 12th, 14th. On May 10th a concert in commemoration of the 250th anniversary of Bach's birth consists of a performance of the B Minor Mass, which Dr. Adrian Boult will conduct. The three concerts on May 17th, 22nd and 27th, are to be conducted by Serge Koussevitzky, and all four concerts in June are to be conducted by Toscanini.

A Team of Two

ON January 25th two artistes new to broadcasting will appear in England. They are Betty Laidlaw and Bob Liveley, who describe themselves as a team of writers, composers and lyricists. They write their own songs and sketches and, in the American manner, are among the most entertaining syncopated acts which Brian Michie has been able to obtain for one of his feature programmes. Liveley started his career as an actor and has run the whole gamut of stock companies, vaudeville, etc., appearing in many Broadway productions. Later he transferred to films.

Avoiding the Faux Pas

To possess a copy of the new edition of "Broadcast English," just published by the B.B.C. at 7d. post free, should secure admission into all strata of society. For example, there would be no possible danger of annoying a Russian prince by calling him a Cesarewitch when you mean a Cesarevitch and covering up the mistake with a little coarse horse talk. And words like "incomparable" and "egregious" would trip off the lips without that tell-tale hiccough that deceives no one.

A Change of Mind

"Egregious," by the way, is one of those words over which the new B.B.C. Advisory Committee on Spoken English has reversed the decision of the old. The new committee really began existence last year when a small body of expert scholars was called in, consisting of Professor H. C. K. Wyld of the University of Oxford; Professor Daniel Jones and Professor A. Lloyd James of London; and Mr. Harold Orton of the University of Durham.

Becoming Modesty

Once again the Committee emphasises that this list of pronunciations is intended for announcers; it is not suggested that the recommended pronunciations are the only "right" ones, nor is it claimed that any special degree of authority attaches to them.

Still, the B.B.C. could never be far wrong, could it?

Letters to the Editor:—

Broadcasting's Most Urgent Need

The Editor does not hold himself responsible for the opinions of his correspondents

Frequency Separation

WITH reference to the "Editorial Comment" in your January 4th issue, I am very pleased to see that you are again raising the question of a wider frequency separation. There must be many of your readers who, like myself, would be content with fewer stations at an improved quality.

I think that the old idea of allotting a definite band of frequencies to each country is one which should be tried; those countries who are content with a lower standard of quality could then have as many stations as they wished within their allotted band.

It is high time that steps were taken to bring about some radical change.

A. RANDALL.

Bridport, Dorset.

YOUR leader is, I think, a little unfair to the present arrangement of wavelength distribution, so I am writing in defence of the existing condition.

To transmit up to 13,000 cycles, as suggested by you, would require a wavelength separation of 26 kc/s for perfect reproduction. This would mean scrapping two-thirds of Europe's transmitters!

Supposing such a perfect condition as 26 kc/s separation were to exist, who would benefit except the local station listener, for perfect, high-quality reception is limited for stations over 100 miles away by the distortion caused by fading and the noise level, which would be considerably increased by the large band acceptance of the new receiver?

How much do we gain by increased separation? Doubling the separation only increases the possible musical range by *one octave*, so if we used 13 kc/s separation instead of 26 kc/s we lose only the top octave, that octave which contains the feeble higher harmonics and hiss.

To test the worth of high-quality transmission, let us take a large number of people —not musicians or technicians only, for wireless is made for all, is it not?—show them a linear amplifier transmitting ordinary speech or music up to 13,000 cycles. Include on the amplifier a filter which cuts off at 6,000 cycles and can be "thrown in" by a switch. Then, without telling them what to look for, switch in the filter! I am certain not more than 4 per cent. will notice any change. How, then, can transmission up to 13,000 cycles be justified if the public cannot appreciate it?

As it is, if we take a general survey of the sounds which reach the microphone, the level at the top end of the spectrum is much lower than those at the bottom end. A note of 4,000 cycles is, on an average, about 20 db. below a note of 200 cycles. An interfering note of 8,000 cycles is heard on the adjacent channel as a very weak note of 1,000 cycles (9 kc/s separation), doubly weak because it is only a single side band. Consequently, we may receive a signal from a reasonably strong transmission and get reception up to 6,000 cycles which is fairly free from interference. A slight "squitter" may be heard during a silence, but it would pass quite unnoticed during continuous transmission. Reception of the local station can be *very* nearly perfect.

There is, I think, one definite improvement which could be made, that is the modification of transmitters as outlined by P. P. Eckersley in his paper, "Asymmetric Sideband Broadcast Transmission" (Proc. Inst. R.E., 2/10/34). With this method it would be possible to increase separation without decreasing the number of stations, but the input filters of all receivers would need to be good. Are they good now?

A. H. WICKHAM
(B.I. Research Dept.).

St. Helens, Lancs.

WITH reference to your recent leader advocating that wavelengths be allocated in bands to the different European countries so that within the limits of its own band each country may do what is right in its own eyes, I would agree that a course such as this probably represents the only way of obtaining the highest quality of reproduction combined with freedom from interference provided that broadcasting continues on the present wavelengths. Is this necessary, however? It seems to me that the true solution of the problem lies in the use of ultra-short wavelengths.

I would suggest that either the present broadcasting system be retained and be supplemented by ultra-high quality transmitters on the ultra-short wavelengths, or better still, that the normal wavelengths be reserved for the National programme, radiated from one or two high-power stations only at high quality, and the Regional programme be transferred to the ultra-short wavelengths.

I feel that if the present numerous wavelengths used for Regional and National transmitters were given up, room could be found for two British high-power stations spaced some 18 kc/s from their neighbours, and reproduction at any distance should then be possible up to at least 10,000 c/s without interference. The Regional programme, being presumably of more local interest, could be radiated by ultra-short wave transmitters located in the chief towns. The transmitters should, in general, be on high ground in the centre of the town so that the service area covers the most densely populated area. In the case of London, of course, it might prove necessary to use four or five transmitters located on a circle of some 10 to 15 miles in diameter around a central point.

I believe that the range obtainable on these wavelengths is greater than is commonly supposed, particularly if directional methods of reception be used, and there is no doubt that we shall be forced to them when television is more fully developed. If they were to be used for sound broadcasting now, therefore, it would greatly stimulate research and development, and well prepare the way for television so far as receiving technique is concerned. E. V. TAYLOR.

London, N.

Alternatives to Home Television

THE writer of your article under the above title, commenting in his letter in your issue of December 28th on my outline of what I call "Still Television," makes one remark which I receive with acclamation. "I will instantly agree," he says, "that if one knew how this was to be accomplished it would be an infinitely more pleasing alternative . . . ." There must be *some* good in him.

For the rest, after consulting two dictionaries and my own face in the shaving glass, in my attempts to get a true appreciation of the meaning of the adjective "naïve" which he applies to me, I am returning to the dictionaries to search for the correct term to apply to someone who dismisses as a naïve "philosophical abstraction" and/or a "chimeric fancy" any proposal which does not limit itself to "things that are now within existing known technique." The lamentable nature of this attitude requires, I think, no elaboration in a journal whose readers are continually welcoming some new advance in technique—something wanted but hitherto impossible, now converted into actual fact. Inventions and discoveries *sometimes* come by accident, unsought; but they are likely to come more certainly and more quickly if, as I put it in my original letter, "the problem is actually set." That was my object in writing the letter.

Regarding my adjective "visio," I am quite ready to withdraw it provided it is agreed to use the words "sound" and "vision" to distinguish between the channels, tuning circuits, transmitters, and so on, connected with the two components, respectively, of a sound-and-vision programme. But I had noticed that the Americans were beginning to take "audio" away from its original use in conjunction with "frequency" and to use it for this special purpose; and that they were toying with the idea of "video" as its complement. And I thought that if we were to have a fairly dreadful new word it might as well be "visio," which at least has the merit of being obviously connected with "vision" in a world where compulsory Latin is rapidly dying out. And, anyhow, nobody would dare to *say* "video"; for with the vague terror of "modern pronunciation" hanging over him he would never be sure how to pronounce it.

Retarded Television.—Like you contributor, I regret that I cannot help your other correspondent, Mr. Evans, with regard to actual developments. But it may interest him to turn up "QST Française" of July and November, 1928, and January, 1929, where he will find L.Thurm describing his system of delayed television and telecinematography, in which the scanning signals are stored up by a magnetic method, transmitted and recorded again more slowly over the radio link, and finally speeded up in the receiver; also "L'Onde Électrique" of December, 1933, for Kusal's suggestion of "transmission au ralenti."

D'ORSAY BELL.

London.

Wireless at the Physical Society's Exhibition

Scientific Measurement in Radio Research

A CONSIDERABLE proportion of the exhibition was made up of electrical measuring apparatus, both for research work and for the testing of receivers in commercial production.

The Ekco stand had a full series of factory test instruments, of which the 100 kc/s inductance bridge is typical. This is a mains-driven unit, intended for checking the inductance of dual-range coils, and incorporates the necessary oscillator and detector. A change-over switch selects either of two standard inductances, which may be pre-set to the correct value, and at the same time brings into circuit one of two power-factor correctors to balance the resistance of the

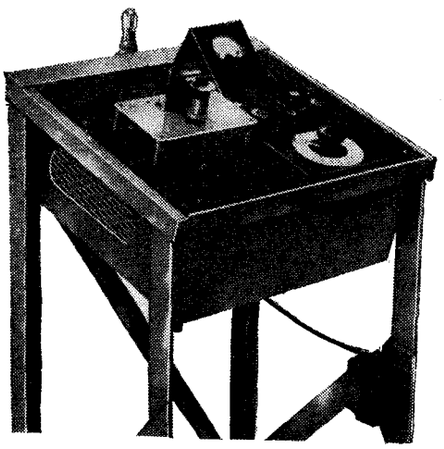

Ekco 100 kc/s inductance bridge for the mass production testing of tuning coils. Range 20 to 5,000 microhenries. Accuracy 0.1 per cent.

coil under test. There is an out-of-balance adjustment which indicates, from the position to which it must be set to produce balance, the magnitude and sign of the difference between the test and standard inductances. Another instrument in the series is the distortion factor meter, which is a bridge tuned to eliminate the fundamental (the nominal working range is 150 to 3,000 c/s) so that the harmonic output only is measured on a meter; by comparison with a known fraction of the total input this gives the harmonic content as a percentage.

A sensitive megohm meter made by Claude Lyons, using a bridge circuit and four-electrode valve with anode current meter as balance detector, has a range from 10,000 ohms to 10,000 megohms on a two-decade dial with five-range multiplying switch. The same firm makes a reactance meter for measuring small capacities or inductances by substitution in the tuned circuit of an oscillator. After adding the unknown reactance, the tuned circuit is restored to its original frequency by adjusting a calibrated condenser. The standard frequency is fixed by the condition of zero beat with a reference oscillator which forms part of the meter.

As a portable source of audio-frequency current there is a new Standard Telephones battery-operated heterodyne oscillator, which covers the range from 20 to 10,000 c/s and gives an output of 15 mA into 600 ohms (i.e., 0.24 watt).

For measuring small audio-frequency voltages a valve-voltmeter is the best instrument, such as the Salford mains-driven model, which, by using a neon tube stabiliser in the anode supply and a barretter in the L.T. lead, is independent of mains voltage from 200 to 250 volts. It uses an anode bend rectifier with bias obtained from a resistance in the cathode lead, so that bias is increased as the input is raised; this improves the scale shape, and the range can be changed by altering the value of bias resistance. For the detection of very small voltages, as in bridge measurements, there is a Standard Telephones portable detector-amplifier which gives a gain of at least 75 db. for frequencies between 700 c/s and 50,000 c/s; the final indicator may be either telephones or a rectifier type output meter. Up to 3,600 c/s it functions as a two-stage tuned amplifier, but above this frequency a heterodyne arrangement is used with copper-oxide rectifiers in a balanced modulator circuit. The variable frequency oscillator has simultaneous capacity and permeability tuning, the variable capacity being a two-plate compression type condenser with very thin solid dielectric, so that the maximum value can be made 10,000 $\mu\mu f$ although the minimum remains very small.

Measuring Interference

For the measurement of electrical interference with wireless reception the Electrical Research Association has constructed a receiver which can be arranged to give results in accordance with any of the proposed definitions, such as radio-frequency field strength or audio-frequency output with or without a carrier. The radio-frequency amplifier in this receiver employs

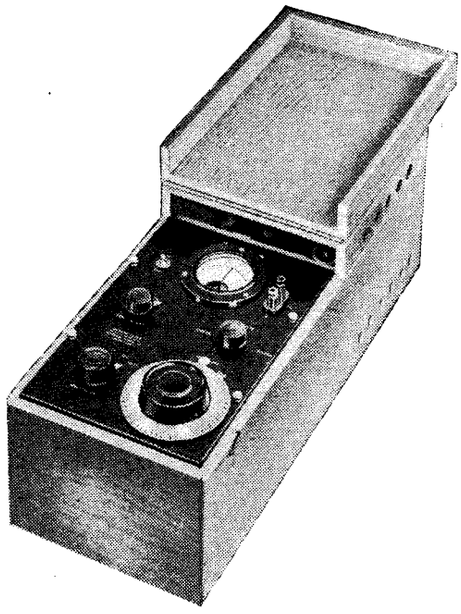

Claude Lyons Type 544-A megohm meter, a bridge-type instrument with SG valve "null" indicator. Range 10,000 ohms to 10,000 megohms.

triode valves to ensure a linear relation between input and output, and there is a separate oscillator unit for supplying a carrier when necessary or for calibration. Apart from this electrical "noise," ordinary sound is most easily measured by first converting it into electrical energy by means of a calibrated microphone. In the Western Electric noise measuring set the microphone is followed by an amplifier including a network to make the overall response similar to that of the human ear, and a heterodyne arrangement ("search tone"), which with a suitable filter makes it possible to select a narrow band at any position in the audio-frequency spectrum; the rectifier type output meter then indicates the intensity of the noise components within this range. A similar human ear characteristic amplifier was used by the Post Office Engineering research station for measuring microphonicity of valves used in telephone circuits; the valve is connected to the input of the amplifier, and a steel ball dropped on to the

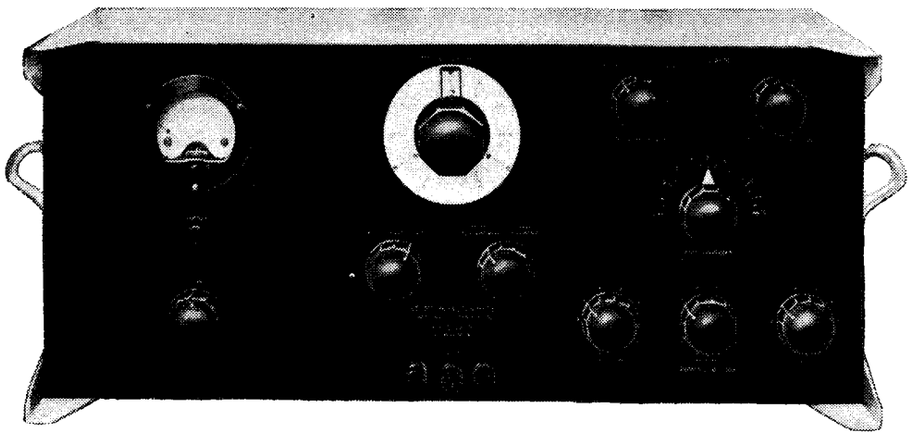

Ekco distortion factor meter giving direct readings of harmonic content of audio frequencies from 150 to 3,000 cycles.

Wireless at the Physical Society's Exhibition—mounting carrying the valve provides a standard mechanical impulse.

One of the chief items on the Post Office stand was an automatic recording level indicator for use on lines such as are employed for international relays of broadcast programmes. After a preliminary signal the equipment at one end of the line transmits a constant voltage at a frequency which varies steadily from 30 to 10,000 c/s. At the receiving end there is an amplifier feeding a rectifier and visual indicator, which may be followed by a DC amplifier and recording instrument; the chart of the latter is set in motion at a predetermined speed by the preliminary signal from the transmitter, and the frequency response curve which is thus traced out can be read to about ½ db.

Uses of the Cathode Ray Tube

One of the handiest forms of cathode-ray oscillograph which has so far been produced is the Standard Telephones portable unit. An internal 2-volt accumulator supplies the filament current, and by means of an induction coil and metal rectifier also provides the necessary high-tension voltage. Included in the unit is a single-sweep time-base of adjustable speed suitable for audio-frequency wave-forms, and, of course, an external time-base can be used.

Amongst the many applications of the cathode-ray tube there is the measurement of frequency response curves of radio-frequency filters. The time-base of the tube is synchronised with the change of frequency of an oscillator, thus becoming a frequency scale, while the output from the filter is amplified and controls deflection in the opposite direction. The response curve is traced

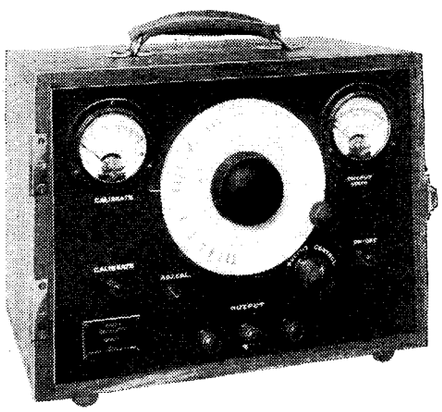

Standard Telephones battery-operated portable heterodyne oscillator.

out on the screen sufficiently rapidly to appear as a steady image. Complete equipment for this type of measurement has been made by both G.E.C. and Plessey, the latter using an Ediswan high-vacuum tube. A useful feature of the Plessey equipment is the provision of a selective wavemeter circuit which can be used to calibrate the screen of the tube directly in frequency.

Marconi's Wireless Telegraph Co. were exhibiting equipment for feeding a single-sideband and carrier signal to existing broadcasting transmitters. The overall response is uniform within 3 db. between 55 and 9,000 c/s, and with sideband energy 8 db. below the carrier satisfactory reception is possible with ordinary receivers.

Returning to the Post Office Research stand, the equipment for measuring the sound pressure in the mouth-piece of a microphone included a "probing microphone" of

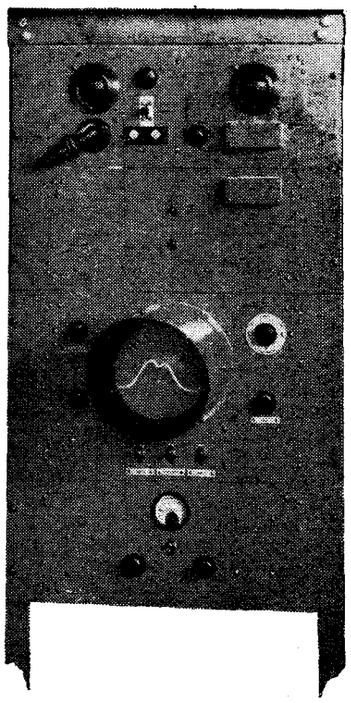

Plessey cathode-ray equipment for viewing response curves of IF couplings.

unusual appearance. The opening of a narrow tube is placed at the spot where the sound is to be measured, and has comparatively little effect on the sound distribution; the tube is theoretically of infinite length, so that a sound wave is propagated down the tube but is never reflected back. A microphone is situated at some distance along its length, and in this particular model there is a long length of tube coiled in a spiral beyond the microphone. Another "conduit" microphone, designed by Mr. P. W. Willans, was exhibited by Muirhead; in this case the effect of an infinite tube was obtained with a comparatively short length behind the microphone filled with absorbing material to prevent reflection.

As an alternative to mercury vapour relay tubes there are now Ediswan tubes with inert gas fillings (neon or argon). These have similar current ratings to the mercury vapour types, but will operate at frequencies up to 60,000 c/s; the only disadvantage is that at the end of their life there may be a tendency for the gas to "clean up," causing erratic operation. For use with cathode-ray tubes some new Dubilier smoothing condensers for 1,000 to 2,000 volts have been introduced; they use paper dielectric immersed in oil in place of the usual wax-impregnated paper, and are considerably less expensive than the older types.

There is now a battery model of the Multitone combined radio receiver and deaf-aid amplifier; like the mains model, it can be used as a normal receiver, with two-way tone-control and the output feeding both a loud speaker and telephones, or as a speech amplifier using the loud speaker as microphone. The output to the telephones has an independent volume control.

NEW TUNING SCALE

Accurate Station Indicator

An interesting tuning scale is described in patent specification No. 414,402 of The British Thomson-Houston Co., Ltd. The feature of greatest interest lies in the means provided for adjusting the movement of the indicating pointer so that an accurate calibration can be secured with different receivers.

The arrangement can best be understood by reference to the diagram which shows a longitudinal scale S calibrated in frequency or wavelength. The pointer I is mounted on a sliding carriage C operated by the cords L, which, after passing round suitably placed pulleys, are wrapped round a drum carried by the spindle of the variable condenser. As the spindle is rotated, therefore, the carriage C and the indicator I slide along in front of the scale.

Now although an accurate calibration may be secured with one receiver, the inevitable differences between different sets lead to error. In order to employ a printed scale, therefore, means are provided for modifying the movement of the pointer. It is not rigidly fixed to the carriage, but can itself slide sideways on the carriage. The pointer carries a pin which works in a fork at the end of a lever M carrying at its lower end a roller R which presses on a strip D. This strip is made of flexible metal, and the contour of its surface can be adjusted by a number of screws T.

It can be seen, therefore, that if the condenser be steadily rotated, the indicator carriage will travel steadily, but the motion of the pointer will be modified by the shape of the strip D. Assuming the case when the carriage is moving to the right, if the roller R passes over a portion of the strip of increasing height, the pointer moves to the left relative to the carriage, so that although the pointer is still moving to the right across the scale it is moving less rapidly than the carriage. If the roller passes over a portion of the strip decreasing in height, it is easy to see that the pointer moves more rapidly than the carriage.

It is possible, therefore, to ensure an accurate calibration, for the adjustment of the screws T can be as easily carried out in

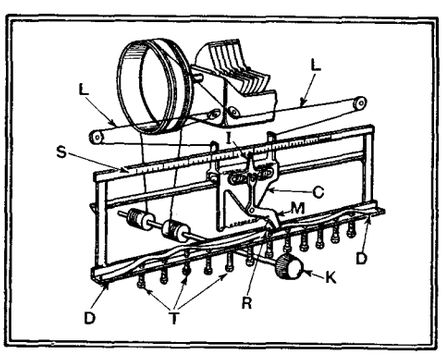

The indicator readings can be accurately adjusted by means of the screws T.

the factory as the ganging, and, indeed, in some respects it is not dissimilar. The method is applicable to various types of tuning scale, and if generally adopted should lead to a considerable improvement in the accuracy of calibration of receivers.

Short Waves and the Amateur

THE STABILISATION OF HIGH FREQUENCIES

1—Adding an "Electric Flywheel" to a Short-wave Oscillator

By G2TD and G5KU

WITH the introduction of short-wave technique, the experimenter, familiar as he may be with normal technique, finds his everyday apparatus appearing in a new light. The input capacity of valves, the reactance of a few inches of wire, and the point at which a chassis or layout is earthed, now compels consideration. For the transmitting amateur the chief problem at his *début* is the apparent incompatibility of efficient and plentiful output, with constancy of frequency. One may try out all the various forms of oscillation generators suitable for a short-wave CW or phone transmitter, and generally find them quite stable until the aerial is coupled to the output. Then it is found that keying or any other form of modulation is accompanied by a chirpy or wobbly carrier, generally giving either unreadable signals or at least a feeling of dissatisfaction at the results.

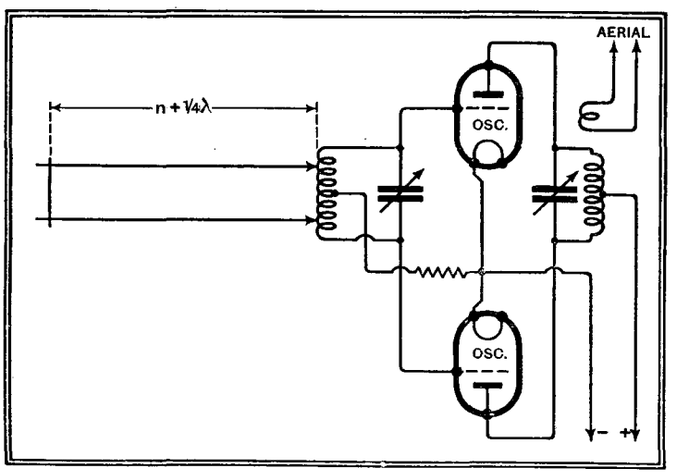

Fig. 1.—Lecher wires utilised as an "electric flywheel" for frequency stabilisation of a push-pull short-wave oscillator.

The fundamental reason for this difficulty is due to the fact that most signals are ultimately reduced to the audio scale of frequencies on reception, and hence a given percentage variation at 14,000 kc/s (20m. band) will be more noticeable than the same percentage of 1,000 kc/s (broadcast band). At the same time the higher frequencies are more subject to influence from small-capacity and temperature variations due to the small values of inductance and capacity used in the circuits.

The main consideration in obtaining a stable transmitter is one of energy content in the various tuned circuits. The ordinary "Hartley" or TG.TP. circuit is only stable when the "volt amperes" of high frequency in the tuned circuits are high, and this usually corresponds to the unloaded condition where any source of radiation or other loss is well removed. Directly any load is coupled to the oscillator, the HF currents in the tuned circuits fall, and, in proportion to the fall in volt-amperes, so instability increases until the transmitter has the characteristics of a DC-AC converter, which, although perhaps capable of dealing with the power used, has no inertia or "flywheel" effect to overcome changes, or even determine at what frequency conversion shall occur.

Before considering oscillation generators, which are inherently stable, such as the crystal-electric type, it will be interesting to show how an "electric flywheel" may be added to an ordinary valve oscillator, and give direct control, at a suitable constancy, of high-power or low-power oscillators.

Although rather cumbersome, and requiring considerable space, the method may be advantageous for the ultra-short wavelengths where frequency multiplying from a stable source is the only alternative.

Most experimenters are familiar with Lecher wires, which are used to measure short wavelengths. They consist of a pair of parallel wires coupled to the oscillator with a sliding bridge piece, by which current antinodes along the wire may be indicated. If such a line is made with low-resistance wires, and a reasonable spacing, e.g., 12 SWG copper, about 4in. spacing, it may be several wavelengths long before appreciable radiation loss results.

However, it will have the important property of containing considerable energy, and can therefore be made to act as a stabiliser on a valve oscillator, which in the loaded condition cannot itself have sufficient energy content for stability. The arrangement for a push-pull TP. TG. oscillator is shown in Fig. 1. If connected across, or to taps on the grid circuit, the line should be $n+\frac{1}{4}$ wavelengths long, n being of the order of 10. Ten wavelengths may be found very inconvenient, even on 5 metres. It is not absolutely necessary to keep the line straight, and it can be conveniently arranged in an attic, or even on a large frame, provided sharp bends are avoided, and wire spacing is kept small, compared with the dimensions of the frame.

Adjustment

In adjusting the line, the oscillator is operated at the frequency required, and the slider on the wires, pre-set to the roughly calculated position, is finally adjusted with the aid of a loop and lamp held near the slider while it is moved about this position until the point of maximum current is found, when the slider can be clamped or soldered in place.

For those who can spare the space, this method of frequency control offers an interesting study. With careful design on the longer wavelengths, the line may be found sufficient for regeneration, and the tuned grid circuit omitted, in which case the grid leak is taken to the slider in the push-pull circuit, or after a grid condenser to the grid in single-valve circuits, although for a single valve the arrangement of Fig. 2 may be more efficient. Although, at first, a little more troublesome than normal crystal control arrangements, the method, while not possessing absolute stability, will give surprisingly good results, and has been used considerably on several high-power transmitters directly controlling some 50 kW. Perhaps one advantage that may be appreciated by the low-powered amateur is that the transmitted frequency may be altered from

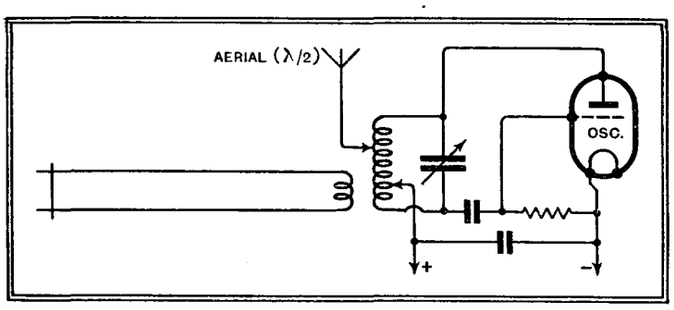

Fig. 2.—This arrangement may prove more satisfactory for a single-valve oscillator

Short Waves and the Amateur—
time to time by retuning and adjusting the line accordingly.

DX Notes

Some evidence is to hand showing that a quite localised electrical storm can have a fairly widespread effect on the upper ionised belt. During a recent thunderstorm over North London communication was established with an amateur in Northumberland at 11 p.m. on 20m. At this time, normally, no such possibility would exist. The transmission had considerable fading between R8 and R2, and at the same time American and Canadian stations were received—another abnormal phenomenon. On the normal daylight route, such as America to England, the period of maximum transmission is becoming very small, while the farther States (W6 and W7), together with South Africa, have an extended period, although in the early stages W6 and W7 can only be worked with considerable high-speed fading, often sufficient to give no intelligibility. The following suggestion is put forward as a useful addition to the "T" code in these longer-distance contacts. The T number is followed by the letters A, B, or C, with the following significance:—

A.—Normal transmission, little or no fading.

B.—Slow fading.

C.—High-speed fading. Slow, well-spaced sending desirable.

The addition to the T code of such modifications has no implication that the transmitter is responsible for these effects, as they are entirely due to the medium through which the signals are transmitted.

THE RADIO INDUSTRY

A MODIFICATION of the Ediswan ES.75 valve, with a graphite anode, has just been introduced. Thanks to the improved radiating properties of this material, as compared with metal, the valve will dissipate 75 watts without overheating, and, in addition, there is no risk of warping and consequent change of characteristics.

The principal electrical and mechanical details of the Marconiphone Radio-gramophone, Model 292, of which a very favourable review appeared recently in our pages, is described and illustrated in a brochure just issued by the Marconiphone Co., Ltd., 210-212, Tottenham Court Road, London, W.1.

A new series of high-tension batteries, to be sold under the trade-name of "Sunbeam," have just been introduced by Fuller Accumulator Co., Ltd., Woodland Works, Chadwell Heath, Essex. Prices: 60-volt, 3s. 6d.; 100-volt, 5s. 6d.; 120-volt, 6s. 6d.

Short-wave Broadcasting

CONDITIONS since the beginning of the new year have been surprisingly good. All the higher-powered American stations have been received with the reliability that one usually associates with Beromunster or Budapest on the medium-wave band.

W8XK, as usual, continues to be the best "all-rounder," as on each of his listed frequencies he is outstanding. On 19.72 metres he is almost invariably twice the strength of W2XAD; on 13.92 he is, of course, in sole possession. The 25.25 and 48.86 metre transmissions are too well known to require comment. Suffice it to say that W8XK is usually audible on 48.86 metres for at least half an hour before the other Americans in the 49-metre band are heard at all.

Lesser-known stations heard since January 1st include a new Japanese "phone," JVT, on 44.5 metres. Although listed as a commercial 'phone station, JVT may often be heard relaying JOAK's broadcast programmes. This station has been heard at various times between 2 p.m. and midnight.

Asiatic Time Freaks

VUB, Bombay, on 31.36 metres, seems to be improving steadily, and may be heard occasionally between noon and 1 p.m. A more favourable time, however, is later in the afternoon, but the transmission times appear to be so irregular that one cannot count on this station.

Asiatic stations seem to be pre-eminent in one respect—the wide variety of times at which it is possible to hear them. There is a time of day when North America cannot be heard reliably on any wavelength; South America is more or less a "night bird"; Africa and Australia have their own definite times, but Asia seems to be ubiquitous, if that adjective may be applied to time.

Indian amateurs on the 20-metre band are often heard before mid-day, and on 40 metres one hears the Philippine Islands in the afternoon and Japan and China in the evening. It is a great pity that there are so few broadcasting stations with regular hours in the whole of the vast continent.

Still the Central and "North-South Americans" continue to make themselves heard in quantities. Just how many Colombian stations are on the air is a question that defies answer. Costa Rica, Guatemala, the Dominican Republic, Cuba, Jamaica, Nicaragua, Venezuela and British Guiana are all heard at times. Probably the fact that so many independent countries are concentrated in a relatively small space accounts for the multiplicity of stations.

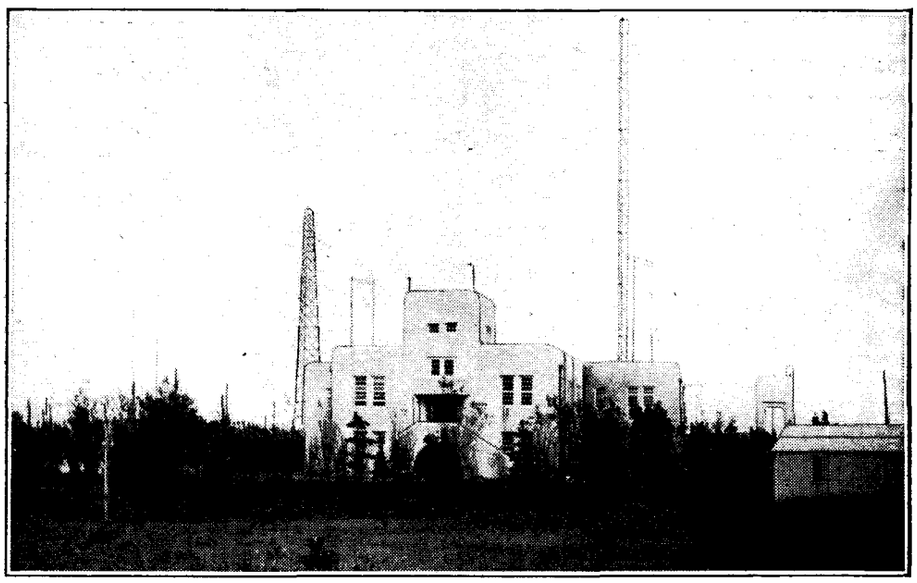

A JAPANESE SHORT-WAVE STATION. The modernistic note is evident in the appearance of JIAA, Chiba-Ken, Japan. Broadcast programmes are relayed daily on 38.07 metres (7880 kc.) with the call sign JVR.

Short Waves from Europe

Doubtless that class of readers that is most interested in loud speaker reception finds very good programme-matter being radiated from the European short-wave stations. The writer, admittedly, passes over a European as something to be avoided, but that is only because he is usually busy finding weaker stations! Moscow and Zeesen, however, have helped to fill an occasional hour with a really good programme.

Moscow's strength during the middle of the evening is little short of amazing. When one thinks of the difficulty in receiving really good programmes from Russia on the medium waves one appreciates the fact that short waves are worth while, even for the man who does not aspire to leave Europe behind him and tour the world.

One or two readers have brought up the question of aerials for short-wave reception. It is, of course, almost impossible to design a system that is really highly efficient for all the short-wave bands; but the writer finds that a horizontal wire about 50 feet in length resonates near the 31-metre band and is capable of being tuned to each of the others without much inconvenience.

In any case, so many short-wave listeners use an untuned input circuit that it is impossible to hit upon a universal aerial.

For amateur-band work—all the bands being harmonically related—it is, of course, a simple matter to put up a wire about 67 feet long, resonating in all the bands.

MEGACYCLE.

The Wireless World
THE PRACTICAL RADIO JOURNAL
24th Year of Publication

No. 804. • FRIDAY, JANUARY 25TH, 1935. VOL. XXXVI. No. 4.

Proprietors : ILIFFE & SONS LTD.

Editor :
HUGH S. POCOCK.

Editorial,
Advertising and Publishing Offices :
DORSET HOUSE, STAMFORD STREET,
LONDON, S.E.1.

Telephone : Hop. 3333 (50 lines).
Telegrams : "Ethaworld, Watloo, London."

COVENTRY : Hertford Street.
Telegrams : "Autocar, Coventry." Telephone : 5210 Coventry.

BIRMINGHAM :
Guildhall Buildings, Navigation Street, 2.
Telegrams : "Autopress, Birmingham." Telephone : 2971 Midland (4 lines).

MANCHESTER : 260, Deansgate, 3.
Telegrams : "Iliffe, Manchester." Telephone : Blackfriars 4412 (4 lines).

GLASGOW : 26B, Renfield Street, C.2.
Telegrams : "Iliffe, Glasgow." Telephone : Central 4857.

PUBLISHED WEEKLY. ENTERED AS SECOND CLASS MATTER AT NEW YORK, N.Y.

Subscription Rates :
Home, £1 1s. 8d. ; Canada, £1 1s. 8d. ; other countries, £1 3s. 10d. per annum.

As many of the circuits and apparatus described in these pages are covered by patents, readers are advised, before making use of them, to satisfy themselves that they would not be infringing patents.

CONTENTS

	Page
Editorial Comment	77
Designing a Wireless World Receiver	78
My Home Set V	81
Visual Tuning or QAVC	83
Unbiased	84
Current Topics	85
Television Prospects	86
New Apparatus Reviewed	88
Short Waves and the Amateur	89
Random Radiations	90
Listeners' Guide for the Week	92
Cossor 535 Receiver	94
Foundations of Wireless—IX	96
Letters to the Editor	98
Broadcast Brevities	99
Readers' Problems	100
Principal Broadcasting Stations	101

EDITORIAL COMMENT

Wavelength Allocations

A Work Beset with Problems

A VERY difficult task lies before those whose business it is to arrange for the allocation of wavelengths throughout the world. Because our particular interests may be concerned with broadcasting we ought, nevertheless, not to be blind to the fact that there are all sorts of other claims upon the use of wavelengths.

Just as safety of life at sea demands that shipping should have exclusive bands of wavelengths, so the increasing importance of aerial navigation now makes a similar demand for a fair share of consideration.

Broadcasting, even though it represents the interests of by far the largest section of wireless users, must, nevertheless, not forget that human life depends upon good wireless communication in some other spheres and, therefore, deserves to receive priority of consideration when wavelength allocations are considered.

Demands of Television

The idea that television requires to monopolise wide frequency bands amongst the short waves is bound to produce strong opposition from various quarters, particularly from those who are concerned with the development of communication services for aerial navigation. It is becoming quite generally accepted that short wavelengths of much the same order as those required for television are ideal for certain aerial navigational purposes.

It cannot be denied, too, that from a broadcasting point of view there are very strong arguments in favour of putting the sound associated with television on channels adjacent to the television transmission itself. If sound associated with television goes to short waves, is it not then to be assumed that the normal thing to do would be to transfer most of our broadcasting to these bands also ?

If this policy is adopted generally for broadcasting the useful wavebands will soon tend to fill up, even although the local distribution character of these waves may enable a good many common allocations to be made over a wide geographical area.

All this provides a very pretty problem for those to solve whose job it is, and we do not envy them their task.

Technical Broadcasts

Assisting the Experimenter

THE B.B.C. is to be congratulated on the policy they have adopted of conducting transmissions of a special nature to assist experimenters and others in the correct adjustment of their television receivers for the present 30-line transmissions.

For those who are not regular television observers, it may be explained that these experimental aids take the form of the transmission of the stationary image of a black and white pattern with broadcast instructions on how this should appear on the screen if the design and adjustment of the receiver are correct. The image is retained for a considerable time to enable observers to make adjustments to their apparatus.

This is a most valuable service to television observers, and its re-introduction encourages us to hope that it will very quickly be followed by the long-awaited transmissions of standard frequency notes from Droitwich. A letter published this week suggests that "out of hours" experiments in this direction have already been taking place.

Designing a WIRELESS WORLD Receiver

How a Constructional Set is Evolved

THE research necessary for the production of a successful receiver is not always fully realised, and it is believed, therefore, that a description of the essential process in the case of the New Battery Single-Span Four would be of interest. In this article the early stages of its development are discussed.

WHEN a receiver has been described in *The Wireless World* it is by no means uncommon for letters to be received from readers criticising the design or suggesting improvements to it. Although such letters are always welcomed, and are evidence of the intelligent interest which is taken in the designs published by *The Wireless World*, it would seem that many do not realise how the design of such receivers is carried out. It is rarely possible in the constructional articles to explain the reason for the adoption of each point in the design, nor can any mention be made of the alternative, and sometimes seemingly attractive, arrangements which have been tried and abandoned. A description of the preliminary work on a receiver would completely fill several issues of this journal, even in its new enlarged form, so that it is necessary for the designer to be content with describing only the final model.

It is felt, however, that a departure from the usual procedure would, for once, be helpful, and in this series of articles it is intended to describe as briefly as possible the manner in which the New Single-Span Battery Four was evolved. Work on earlier single-span sets had led to the opinion that it would be possible to produce a good general-purpose battery set employing four valves only—the previous battery set of this type embodied six valves. The performance required demanded a degree of sensitivity adequate for good reception of all the chief continental transmissions after dark, and several of them under day-time conditions. The selectivity would have to be commensurate with the sensitivity, but need be in no way extreme. The quality of reproduction had to be as high as possible within the limits imposed by economical battery operation, and this demanded some form of variable selectivity, since a full high-frequency response can rarely be tolerated in distant reception on account of sideband splash. This is a high standard of performance, but naturally somewhat lower than that given by the earlier sets employing a greater number of valves.

A Class "B" output stage was ruled out by its low sensitivity, for it was known that with such a stage five valves would have to be used to obtain the required results. A decision on the type of output stage was consequently easy, for QPP and Class "B" are the chief rivals for favour. The output valve was thus settled, and the QP21 double QPP pentode selected. Another valve was needed for the frequency-changer, and here there was no alternative to the heptode; this choice was not dictated by any special technical merit, but by the absence of any other type of battery single-valve frequency-changer which would be commercially available in reasonable quantities by the time the set was described.

The IF Stage and Detector

A third valve was obviously necessary as an IF amplifier, and here the choice lay between the screen-grid and the HF pentode types of valve. A change from one to the other would involve little difficulty, so that this was left to be settled experimentally. The fourth valve must be a detector and provide LF amplification for two reasons—first, LF amplification is necessary for gramophone work, and, secondly, in a battery set it would be difficult to obtain sufficient output from an IF stage to feed a detector which directly drives the output stage. It was realised that reaction would be necessary in order

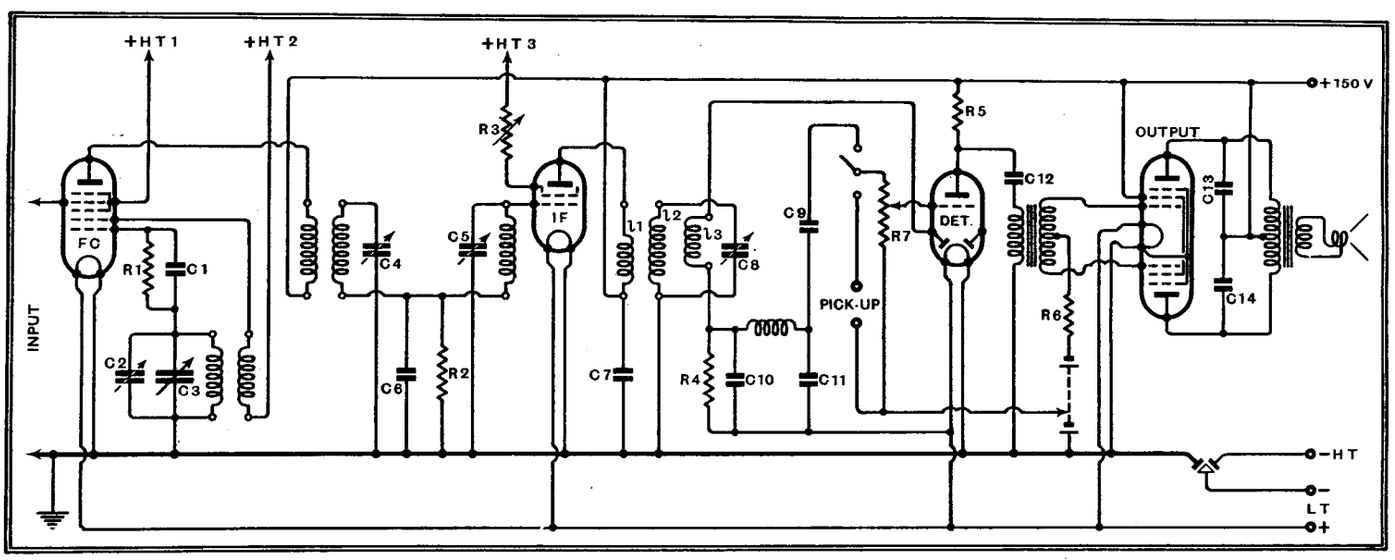

Fig. 1.—The fundamental circuit diagram of the finished receiver. The aerial filter has been omitted.

Designing a Wireless World Receiver—

to obtain the requisite degree of sensitivity and selectivity, so that a grid detector seemed the obvious choice.

It was thought that with careful design three tuned circuits would provide sufficient selectivity, and it was known that four would make the set rather insensitive. An experimental receiver on these lines was built, therefore, and its circuit followed the lines of Fig. 1, save that the detector was a grid rectifier, and an attempt was made to obtain AVC by means of a Westector on the lines shown in Fig. 2. An HF pentode was used in the IF stage.

The preliminary tests on the experimental model of this new set showed a disappointing performance, the sensitivity and selectivity without reaction being distinctly poor, while the volume, even on the local station, did not approach the rating of the output valve; moreover, AVC was completely ineffective. The performance was, in fact, greatly inferior to that of the original six-valve Battery Single-Span Receiver. A detailed investigation of the conditions was carried out, therefore, when the anode currents had been checked to see that none was excessive. In this connection it was noticed that the IF valve consumed 10.5 mA. anode current if operated with the maximum rated screen and anode voltages! Even then, the stage gain was only fifteen times. It was found that by reducing the voltage applied to the screen-grid the anode current could be brought down to the more reasonable figure of 3 mA. and an amplification of 12.5 times obtained. The detector input corresponding to the standard output of 50 milliwatts was 0.3 volt RMS, and it was noticed that if the detector HT supply were interrupted the detector input rose to some 0.9 volt, indicating an IF gain of about 37.5 times—a much more reasonable figure.

The Duo-diode-triode

Only one thing could bring about this effect—anti-phase feed-back through the grid-anode capacity of the detector valve, and it was abnormally large because the AVC circuit prohibited the use of the usual anode-cathode by-pass condenser. The cause of the lack of sensitivity and selectivity was thus explained by the high detector damping. The poor volume was next investigated and readily found to be due to detector overloading.

It was decided, therefore, that some alternative detector would be necessary, and a duo-diode-triode was the obvious valve to employ. The only objection to such a valve was the difficulty of obtaining reaction, but it was hoped that this could be overcome. The receiver was accordingly modified to the circuit of Fig. 1, save that R3 was not included, and this naturally meant rewinding the HF transformer. Preliminary tests indicated

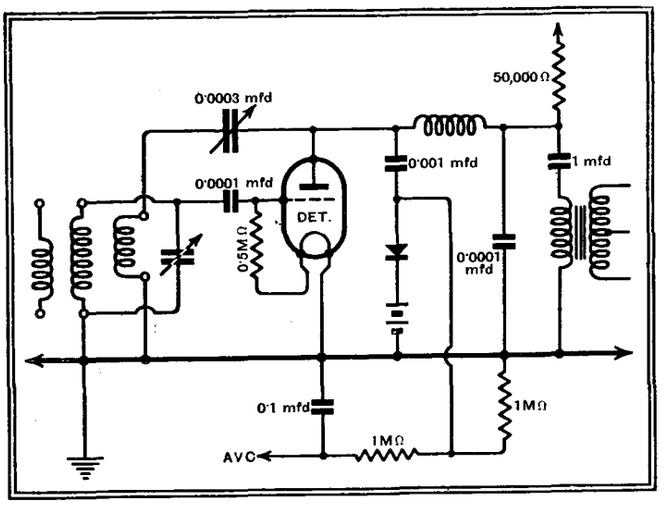

Fig. 2.—An early detector circuit which was found unsatisfactory for reasons explained in the text.

a great improvement in performance, so that the exact design of the receiver was proceeded with. The detector was an HD22, and the output valve a QP21 requiring a maximum total input of 21 volts peak with a 150 volts HT supply and 10.5 volts grid bias. A 150 volts supply was chosen in preference to a lower voltage, since it permits both greater amplification and larger volume to be obtained for a given current consumption; alternatively, for the same amplification and volume the current taken by the set is lower. The running costs of the set depend more upon current consumption than upon battery voltage, so that it is true economy to use a 150 volts supply.

The LF Circuits

The quiescent anode current of the QP21 is rated at some 2.5 mA., but the particular specimen used was found to take slightly less. The LF transformer was chosen as having a good frequency response, bearing in mind its ratio of 1-8 and its moderate price. C13 and C14 were given the standard values of 0.005 mfd., and R6 was 150,000 ohms, while 1 mfd. and 50,000 ohms were selected as being suitable respectively for C12 and R5. With a bias of −1.5 volts, the anode current of the HD22 was 0.9 mA., a satisfactorily low value. In the detector circuit, C10 and C11 were made 0.0001 mfd., C9=0.1 mfd., R4=0.25MΩ, and R7=0.25 MΩ—values which experience indicated as probably satisfactory.

After checking the operation of the detector and LF circuits to make sure that they functioned reasonably well, the design of the IF stage was carried out. A VS24 valve was used and with zero grid bias and 70 bolts screen potential it passed 4.3 mA.; this was a little high, but

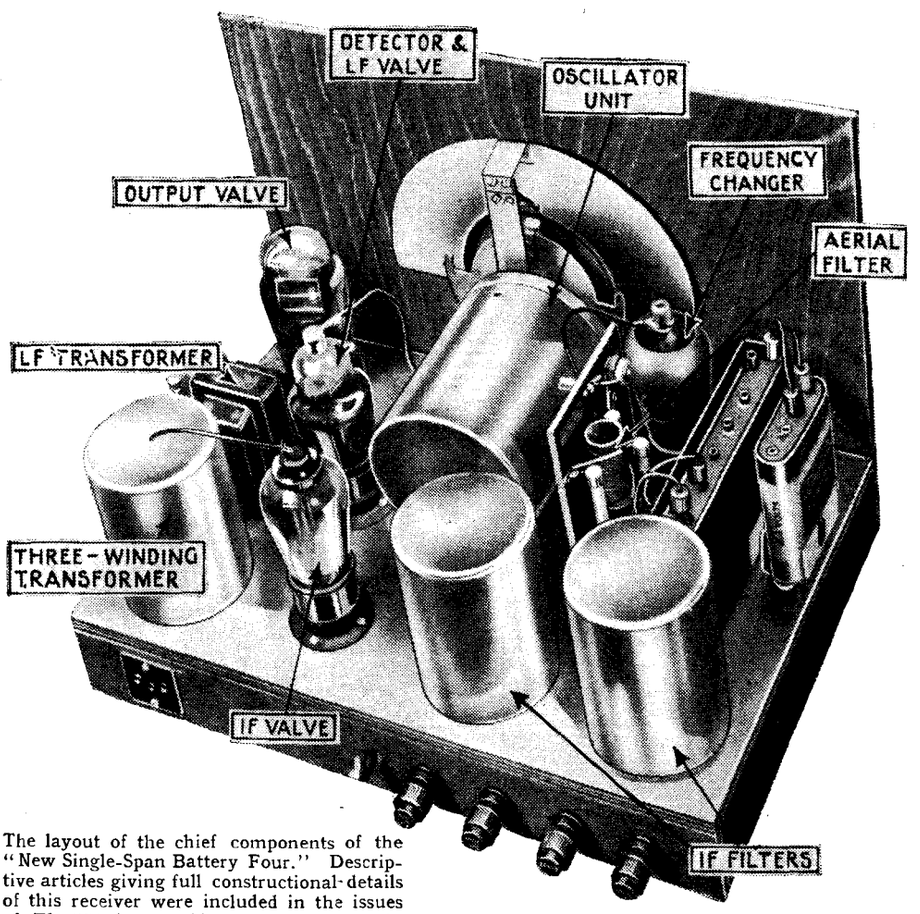

The layout of the chief components of the "New Single-Span Battery Four." Descriptive articles giving full constructional details of this receiver were included in the issues of *The Wireless World* dated December 7th and 14th, 1934.

Designing a Wireless World Receiver—

not excessively so. It was consequently employed for the tests on the transformer.

The tuned winding l2 was of the type employed in earlier single-span receivers since this was known to be reasonably

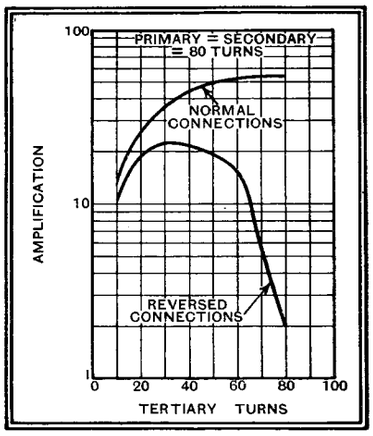

Fig. 3.—The amplification given by the IF valve with various tertiary turns is shown here, together with the effect of reversing the connections.

efficient, and it has 80 turns. Since the dynamic resistance of the tuned circuit alone was about 100,000 ohms and this would be reduced by the detector damping, it was decided to use a 1-1 ratio between l1 and l2, for since the AC resistance of a screen-grid valve is high, it would only reduce amplification without greatly improving selectivity to use fewer primary turns. With the tertiary l3, however, it was quite different, and it was necessary experimentally to determine the optimum number of turns.

A tertiary of 80 turns was wound, therefore, and the gain of the IF valve, from its grid to the detector diode, measured and found to be 54 times. Ten turns were removed from the tertiary and the gain again measured, after which a further ten turns were removed, and so on. This enabled the curve of Fig. 3 to be plotted, showing the variation of amplification with tertiary turns. Although selectivity curves were not taken, it was noticeable by the increasing sharpness of trimming that it improved as the turns decreased.

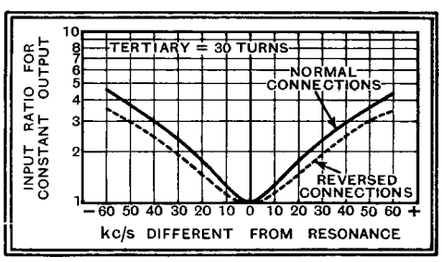

Fig. 4.—The effect on selectivity of reversing the connections to the tertiary winding.

Some doubt was felt as to the best connections to this winding (i.e., which end should be joined to the diode), so the process was repeated with the connections reversed, and the second curve of Fig. 3 obtained. There is no doubt whatever as to which connections are correct from the point of view of amplification, but what about selectivity? To settle this, resonance curves were taken for both conditions with a tertiary of 30 turns, and these are shown in Fig. 4. The normal connections are distinctly the better, and as these are also better for amplification they were definitely decided upon.

IF Valve Anode Current

From an inspection of Fig. 3 it was decided that a tertiary of 40 turns would afford the best compromise between amplification and selectivity, and the next step was to determine the best operating voltages for the valve. The anode voltage was maintained at 150 volts, and starting with zero grid bias, the screen voltage was varied over a wide range of values, the amplification and anode current being measured for each voltage. The process was repeated with a bias of −1.5 volts, and again with −3.0 volts. The results are shown by the lower curves of Fig. 5, expressed as a percentage of the maximum amplification.

It can be seen that for low bias volt-

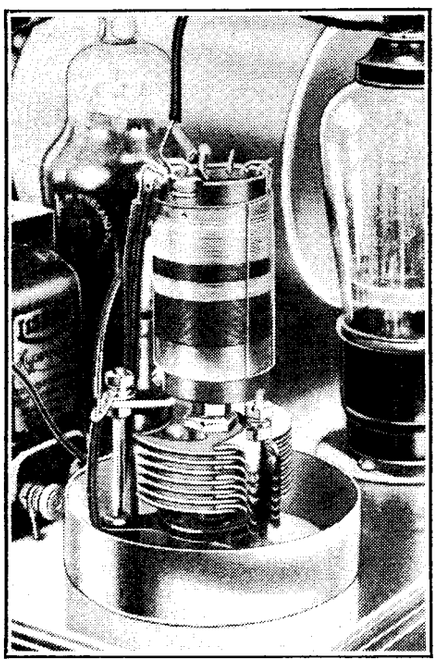

The three-winding IF transformer used to couple the IF valve to the diode detector.

ages there is an optimum anode current, or screen voltage, but that the optimum is fairly flat. The use of too high a screen voltage gives a negligible increase in amplification, or even a reduction, but appreciably increases anode current. It can also be seen that it is better to use a small or no grid bias and a low screen voltage, than a high bias and a high screen voltage. Since it is permissible to use zero grid bias with a battery valve, it was naturally decided to do so.

The screen voltages necessary to produce the anode current are shown by the upper curves of Fig. 5, so that having decided upon the permissible anode current, the screen voltage can be read off. The optimum anode current is 4.3 mA., but if we work with a current of 2.7 mA. the amplification falls by only 9 per cent., whereas there is a saving of 59 per cent. in anode current. This condition corresponds to a screen supply of 56 volts—the nominal 60 volts tapping on an HT battery after a little use. With the full 60 volts the anode current would be 3 mA., quite a small increase.

The design of the IF stage was now settled, and can be summarised as a VS24

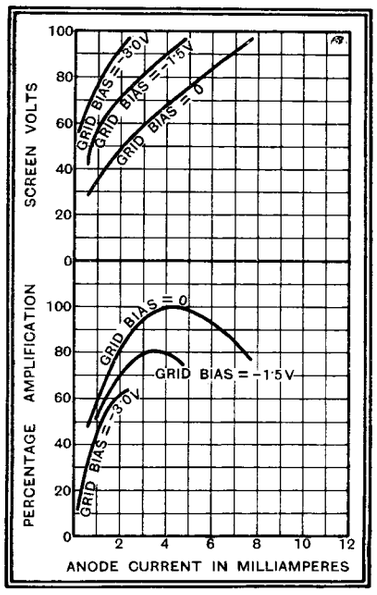

Fig. 5.—The amplification obtainable for different anode currents is shown here, together with the screen voltage necessary to produce the current.

valve operated with 150 volts anode supply, 56 volts for the screen and zero grid bias, under which conditions it passed an anode current of 2.7 mA. and gave an amplification of 40 times. It should be noted that a later measurement with a rewound coil and slightly different detector conditions gave a gain of 58.5 times; this, however, did not include the loss in C10.

(To be concluded.)

FUSES: Do "Weights and Measures" Laws Apply?

A CONTRIBUTOR to *The Electrician* deplores the fact that fuse wire may apparently be sold with impunity under a misleading and technically inaccurate description. Recounting a personal experience, he describes the purchase of a penny card of fuse wire stamped "5 amps."; investigation showed that the wire should actually have been rated at 3 amps.

If fuse wire may thus be over-rated, it is reasonable to assume that it may also be under-rated; for example, it is possible that so-called 10-amp. fuse wire should be rated at 20 amps. and would blow at 40 amps.

The Cossor Portable Mains Oscillograph is a self-contained unit which is sufficiently compact and robust for general workshop or laboratory use. The instrument, which includes its own power, time base, and calibrating circuits, is described in a pamphlet recently issued by the makers.

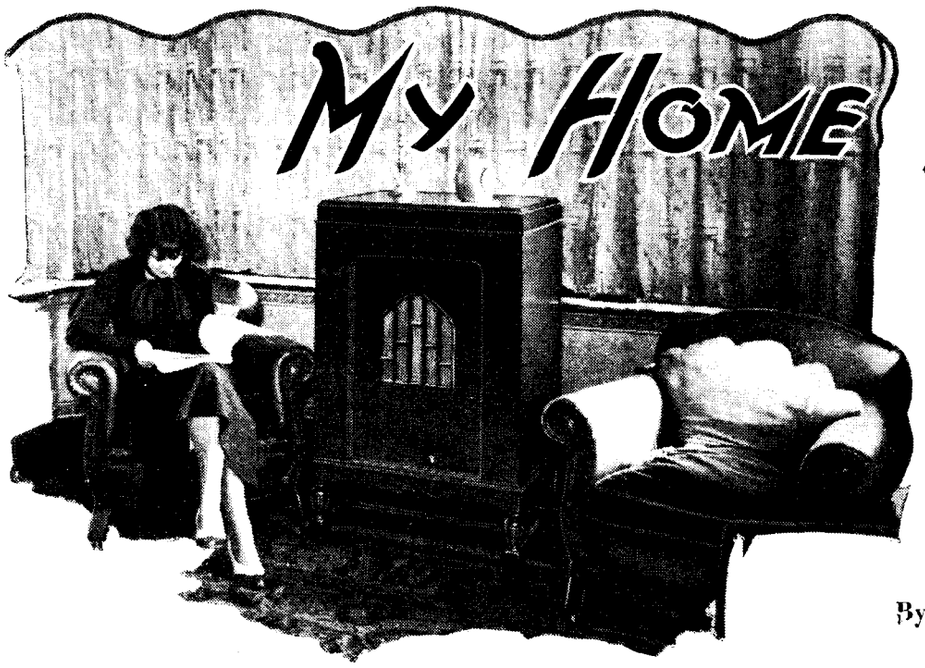

MY HOME SET—V.

Medium-range Receiver Designed for High-quality Reproduction

By L. E. T. BRANCH, B.Sc.

IN this series of articles regular contributors to our pages describe the receivers they themselves use. Perhaps the most interesting feature of the sets discussed so far is the relative freedom from compromise, as compared with ordinary designs intended to satisfy a diversity of tastes and requirements.

MY set as a whole is designed on the basis of obtaining the highest possible fidelity of reproduction from the local stations as a first consideration, with the best reasonable quality from the worth-while foreign stations as a secondary matter. Simplicity, as much as is concomitant with the objects to be attained, has been the keynote of this set, not because simplicity necessarily makes for quality, but rather because complexity means more parts, and every part may be a source of trouble or distortion. No valve curve is a straight line, so the number of valves is kept to a minimum, especially for local station reception.

The output stage is of the push-pull type, as may be seen by an inspection of the circuit diagram of Fig. 1, and triodes are used since it is well known that they are the most satisfactory from the quality viewpoint. I use two PX25 valves with an anode supply of 400 volts. In order to allow a factor of safety, the output transformer is rated for operating at 200 milliamps, and as the output valves are

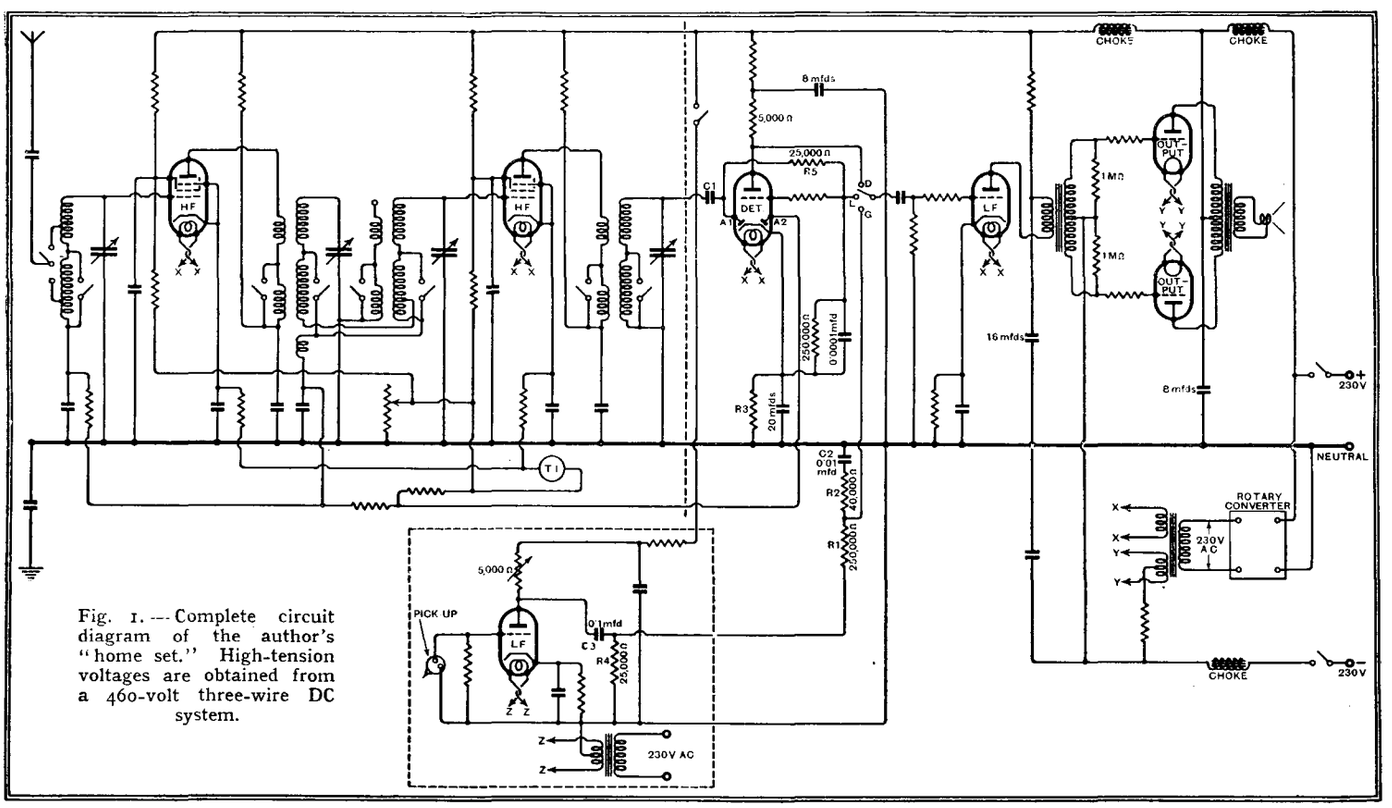

Fig. 1.—Complete circuit diagram of the author's "home set." High-tension voltages are obtained from a 460-volt three-wire DC system.

My Home Set—V.—

heated from a common source, the bias resistance requires no by-pass condenser.

For the coupling from the preceding stage the transformer has its advantages, since it keeps the input required by the LF valve at a low figure. For example, assume that the penultimate valve is an MHL4 of amplification factor about 20. For an input of 25 volts peak for each of the output valves, a voltage of only

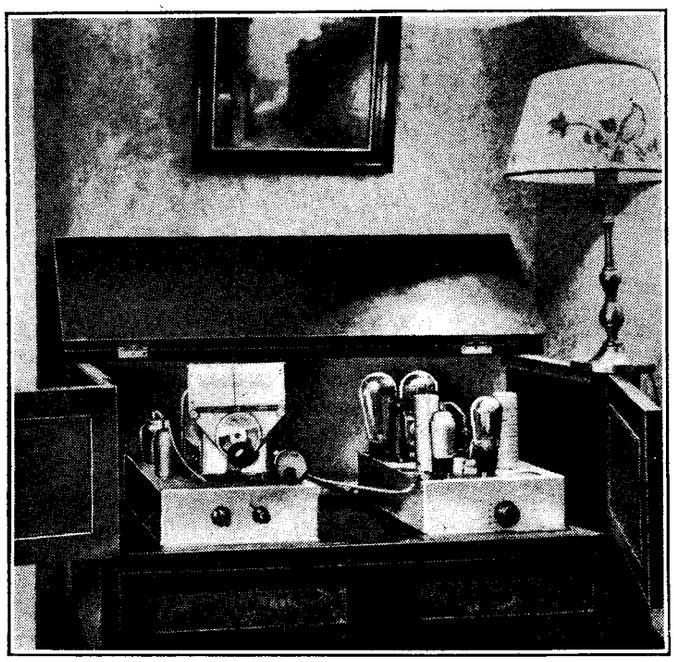

The receiver is divided into high- and low-frequency units; the HF valves are sunk into the base compartment.

$\frac{50}{20 \times 3.5} = 0.7$ volt is required on the grid of the MHL4, if a transformer of ratio 1:3.5 is employed.

LF Transformer Connections

I do not use so-called parallel feed for the transformer because I find the primary circuit tends to resonate and respond to the mains hum frequency. The Ferranti AF5C is specially chosen because it has an inductance, when carrying about 8 milliamps., of 80 henrys. With an MHL4 valve a 50 c/s note is reproduced 95 per cent. By changing the valve for one of the same amplification factor but lower resistance, such as the 41MP, the bass response is even better and also a slight rise in the upper register is introduced, which may be useful for some loud speakers. The grid of the LF valve is isolated from the preceding stages by a condenser so that in no circumstances can the bias of this valve be influenced by the potentials produced in the AVC valve.

The detector valve is a duo-diode-triode and acts not only as a detector, but provides amplified AVC and, when required, an extra stage of LF amplification. The diode A1 acts as the detector, and the steady potential produced by a signal is applied to the triode grid as well as the LF voltages. The steady potential appears in amplified form across R3 and is used for AVC purposes *via* the delay diode A2. An electrolytic by-pass condenser (not smaller than 20 mfd.) shunts this resistance, so that the LF potentials across it are negligible. The LF coupling is necessarily in the anode circuit, and when the switch is in the position D, the full amplification of this stage is employed. When it is set at L, however, the LF amplifier proper is fed from the diode and the gain of this stage is not used. This condition is employed for local reception and most of the stronger Continental stations can be obtained at adequate volume. For weaker stations, the additional stage is switched in.

On a very mediocre aerial the stations which usually come in loudly with the switch at L include, besides the "local stations," Scottish National, Königsberg, Poste Parisien, Breslau, Toulouse, Berlin, Milan, Scottish Regional, Luxembourg, and Radio Paris. As many again are receivable loudly on "distance."

The AVC stage is included in the LF amplifier chassis in order to keep hum pick-up at a minimum. When operating a set in a house fitted throughout with DC mains the wires in the set pick up hum much more easily than when the house only contains AC. Furthermore, the hum so picked up does not pass through the set if it enters in the stages previous to the condenser C1. This condenser is the dividing line as regards hum pick-up. I keep the two chassis side by side in order to have this lead as short as possible, and use screened *thin* wire (about 30 SWG) to keep the capacity down. A 25,000-ohm resistance (R1) is used in place of the more usual HF choke because in a DC fitted house even a screened choke picks up a little hum.

Two-stage H.F. Amplifier

In my set I habitually use the straight HF amplifier shown in the diagram. When making an HF chassis of this kind there are two extremely vital and important considerations if success is to be certain. I think that to-day, more than ever, the set of coils used is the most important item; a Varley coil unit was modified for this set and is known as type BP67. The damping on the various coils is very slight, but even so it is not the same in the different tuned circuits and the coils of the unit are each separately designed to do their particular work with a maximum of efficiency combined with better stability. The other important consideration is the tuning condenser, which must be of high precision and free from stray capacity between sections.

In choosing HF valves, whether pentodes or screen-grid valves, many people look for valves having a high mutual conductance. In my view this is a mistake, or, at least, it is a mistake to go too far. Other things being equal, high slope means greater possibility of instability, which prevents the full magnification being obtained. Hence more magnification is often obtained in practice by getting all

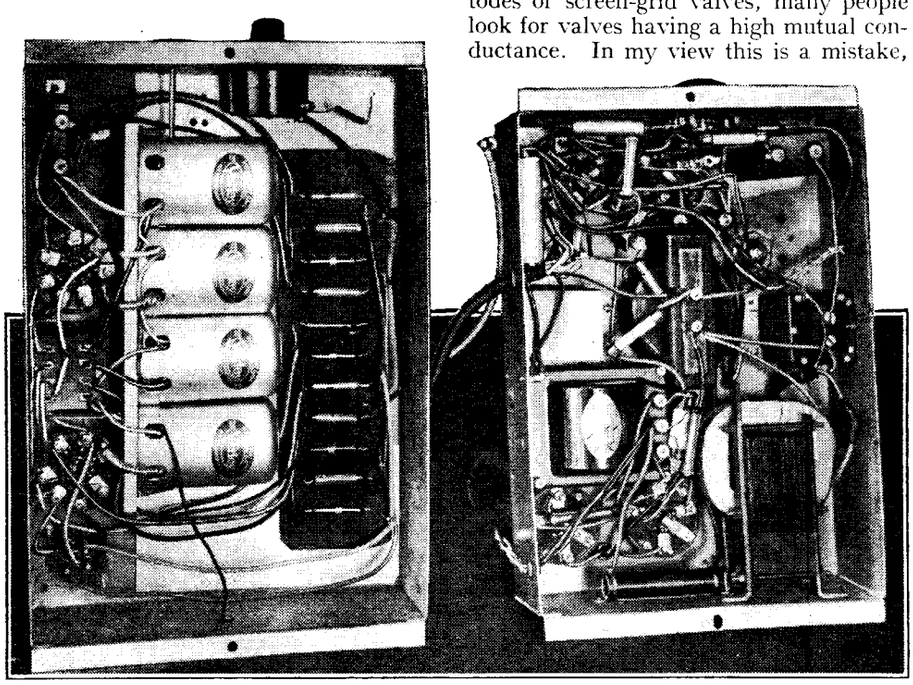

Under-side view of the units: note short leads between HF valve-holders and coils.

My Home Set—V.—

that given by a medium-slope valve rather than only part of that promised by a high-slope valve. The lower-slope valve gives smoother working and freedom from the unpleasant distortion produced by working near the verge of oscillation. Pentodes give a higher ratio of sensitivity to selectivity than screen-grid valves, and the valves used in this set are Hivac AC/VP. The sensitivity is entirely adequate and the selectivity compares almost with a superheterodyne.

A small practical point always to be observed with a metal chassis is that the switch rod of the coils should only be earthed at one end. If the rod touches the chassis at one end and is earthed again at the other, a circuit is set up through the rod and round the chassis and instability results.

The manual volume control on radio is of an unusual type and functions by varying the delay voltage of the AVC circuit. AVC always functions, but the initial sensitivity of the set depends upon the setting of the control, with the result that it is possible so to set it that only fairly strong signals are receivable. This is particularly valuable when local interference or atmospherics are bad, since it permits much inter-station noise to be avoided.

To avoid hum from the gramophone leads, an extra valve is used and housed in the cabinet, which stands about fifteen feet from the set and contains the speaker, the gramophone motor, and the pick-up. Since the pick-up volume control is in the anode of this extra valve, a 41MP is chosen on account of its high magnification factor combined with adequate grid base. It is mounted in a small metal box, which is earthed and lined with about an inch thickness of Essex board, or the like, to make it soundproof. The cabinet is similarly lined to avoid resonances.

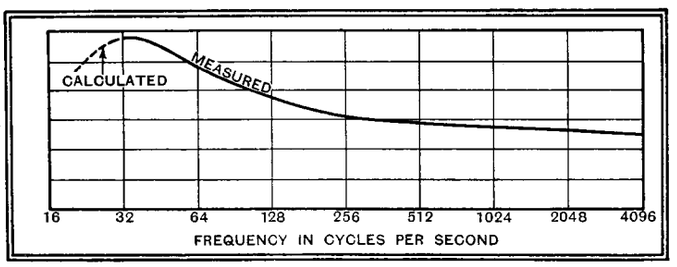

Fig. 2.—Frequency characteristics of the gramophone amplifier.

The network R1, R2 and C2, gives a rising characteristic in the bass to compensate for the fall off below 250 cycles on the record. It is necessary to choose C3 very carefully in relation to R4, in order to avoid too much magnification below 25 cycles, where often a peculiar low flutter may be noticed. When R4 is 25,000 ohms, the best value for C3 is 0.1 mfd. If R4 is increased or decreased, then C3 should be altered proportionally in the same way. The overall characteristic measured from gramophone frequency records to the output is shown in Fig. 2.

My mains are 230-volt DC, negative earthed, and I am fortunate in having the three-wire system in my house, so that I have a third wire which is 230 volts negative with respect to neutral. There is thus 460 volts available for feeding the output stage. The LT supply is AC, obtained with the aid of a transformer and rotary converter.

Visual Tuning or QAVC

By "CATHODE RAY"

WHAT was gadgety yesterday is standard equipment to-day—an interesting thought when considering what may be done to-morrow. All the old hard-boiled motorists snorted with contempt when preselector gears made an appearance. "People who can't drive their cars ought to have chauffeurs to do it for them, or clear off the road altogether!" Now it is a confirmed die-hard who would refuse any easy-changing gear.

The old-time knob-twister saw one-knob controls as symbols of a decadent generation; the ultimate concession to the imbecility of the masses. Any further aid to tuning (apart from writing the names of the stations on the scale) seemed to insult what little intelligence he granted to the general public. Yet it is a fact, to which I willingly testify, that one can seldom go into a house and find a receiver which is properly tuned. Perhaps if absence of knob-sense led to loss of life it *might* be different. . . .

The ordinary listener who perchance reads this may take comfort from several things that can be uttered in his defence. Receivers have become much more selective, so that they are correctly tuned only within a fraction of a degree. The medium wave-band extends for about 1,000,000 cycles per second, and it is undesirable to be off-tune by 1,000. That is only a tenth of one per cent. The result of error is loss of selectivity and change of tone quality (I put it that way because in some sets it is open to question whether the change is for better or worse). Then the adoption of AVC intensifies the tuning difficulty; for so far from guiding one to the right spot by increasing loudness (like the children's party game of "Hot" and "Cold") it is quite common for a programme to sound *less* loud when it is dead in tune.

On the other hand, you are wrong in blaming the manufacturer for not putting his station marks *exactly* in the right place. If you knew all about it you would be congratulating him on getting as near as he does, when he has to turn out a thousand similar sets a day at a few pounds a time. If you paid as many pounds as you do shillings and waited until midsummer he might be able to give you a tuning scale that would be dead right everywhere; and then you would have to tune in with a microscope and get the scale recalibrated every few months.

Hence visual tuning. Does it solve the problem, and will it stay? It is an attractive novelty to have a light flashing up and down or sideways, or a needle like a barometer to show when the maximum has been reached; but novelty alone does not keep a thing in favour. It is arguable that it adds another complication, and in any case may not be regarded or understood by the casual. Or that it is not automatic or foolproof enough. There is always the possibility, too, of it going wrong and being a blind leader of the blind. As a matter of fact, it *can* be quite a reasonably simple, cheap and reliable feature; and those are winning cards.

What about alternatives? As far as I can make out QAVC is one that is not generally thought of in this connection. QAVC, of course, is the feature that shuts off all unprofitably weak stations, along with noise and other items of negligible programme value; leaving the good stations standing out on a background of golden silence. There are all sorts of ways of doing it, and none of them has swept the market. It is possible to contrive it in such a way that the "gate" is open only at the crest of the tuning. It is controlled by super-selective tuning circuits—far too selective for tolerable tone quality—used solely for the purpose. The result (in theory) is that you hear either nothing at all or a correctly tuned programme, these being the two ideal conditions.

If this system could be freed from serious doubts and disabilities it would have several points up on visual tuning. There is the inter-station noise suppression for which it is primarily intended. It is quite automatic. It does not necessarily add anything to the control panel (though it is rather useful to have a blotting-out-level control).

But it is *not* very cheap, very simple, or very reliable; at any rate, not all of them at once. If there is one thing more than another that the radio dealer dreads just now it is having to sell sets that go wrong. This is one of the few matters on which his customers see eye to eye with him. When the ultra-selective QAVC goes wrong it is apt to go very distressingly wrong; by infallibly bringing in every station mistuned, for example.

It may not be beyond the wit of men, or even radio designers, to produce a "sure-fire" device along these lines; one that solves the problem of the careless licencee without undue complication. After that there will be the problem of making the set respond to the desires of its master by mere thought, or, at the most, his word of command.

UNBIASED

By FREE GRID

New Invention

IN these columns I have frequently gone out of my way to express admiration for the hardy pioneers who make two blades of grass grow where but one grew before. As a concrete instance of this sort of thing in the radio industry I have previously praised the man who first thought of the dual loud speaker idea.

But this individual, praiseworthy though he be, has been completely overshadowed by another man who, curiously enough, is a reader of this journal, or, at least, so I gather from the fact that his idea is but an expansion of the self-starter described in *The Wireless World* some years ago. Readers-from-the-first-number and other perverters of the truth will probably fail to remember the idea expounded in the June 10th, 1925, issue of this journal.

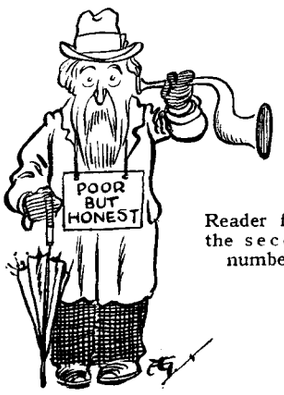

Reader from the second number.

For the benefit of those who did not start taking in "W.W." until the second number, and for other more truthful persons, I may mention that this was a device whereby a set was previously tuned to the wavelength of a station which it was desired to hear as soon as it came on the air. The carrier wave of the station, as soon as it was turned on, actuated a relay in the listener's home and switched on the receiving set. The scheme was, I thought, an excellent one, but the writer of the article omitted to state why it was necessary to produce such a particularly stupid invention; but, of course, as in the case of a murder, it is not absolutely necessary to have a motive.

The new inventor who has merited my attention has greatly expanded this idea of utilising the services of the carrier wave to do a job which could be carried out far more efficiently and simply by saner and more commonplace methods. His invention is nothing more or less than an alarm clock—or at least an alarm without the clock—which is triggered off by an incoming carrier wave emanating from the broadcasting station to which the tuned circuit of the alarm is adjusted.

Now the first objection that you or I would think of would be that all of us do not require to get up at the same unearthly hour of the morning. It would therefore be useless for the B.B.C. to send out a carrier wave at six o'clock, since this would obviously be of no benefit to us company directors who do not rise until noon. Similarly, a mid-day reveille would be quite useless to the milkman and similar toilers of the night, but does a little difficulty of this sort daunt our hero? Not a bit! He is made of sterner stuff. His solution is simple; all that is necessary is that the transmitter be tuned to a different wavelength at different hours of the morning, and we should, of course, adjust our little etheric alarms to some station starting up at a suitable hour as indicated by *World Radio's* time-table, thoughtfully provided for us by a motherly B.B.C.

The utter ingenuity of the whole affair has so intrigued me that I certainly think the inventor ought to rank equally with the man who produced the dual loud speaker and I am therefore preparing a strongly worded recommendation to the Radio Manufacturers' Association.

An Easily Guessed Night

ALL of us, I suppose, have indulged in the pleasant habit of mutual back-scratching. (I am, of course, speaking metaphorically.) In my own case I have frequently had to call attention to the delinquencies of the B.B.C., not to mention more highly placed individuals, such as certain radio manufacturers. These pleasantries have always been reciprocated, one maker of aerial equipment going so far as to send me a length of guy-rope with a polite request. He did not, however, omit to send an invoice a few days after, presumably for the attention of my executors.

One must, however, draw the line somewhere, and there is, I think, a limit even to these little courtesies of life, and, in my opinion, the B.B.C. have overstepped it. I am referring to the sickening orgy of blatant mutual advertisement which takes place on certain nights during the dance music, under the disarming name of "Guest-Night." You and I, being men of the world, know full well that if we want a little newspaper publicity we have only got to write a gushingly appreciative letter to some patent-medicine vendor and enclose a photograph with it, and we shall have achieved our object.

Persistent Demands

In a few days the photograph will appear in the middle of an advertisement which tells all the world and his wife how "Mr. Free Grid, that well-known writer, whose works have been banned in no less than thirty-seven countries and are only permitted to appear in this country in heavily censored form, finds that only by repeated doses of Tagg's Tonic is he able to overcome that tired feeling and so keep up with the persistent demands of his millions of insatiable readers."

Now I will make so bold as to say that had I responded to the invitation which was extended to me a few weeks ago I should have received a first-rate advertisement, not only for myself, but also for *The Wireless World*. Of course, if I were an actor or cinema star it would be the play or picture in which I was appearing that would share the back-scratching and, incidently, the fat profits which would accrue.

These few kind words will, of course, bring forth an indignant denial, supported by some well-founded arguments, but, naturally, this is to be expected just as it is from the lips of a wealthy defendant's council in a breach of promise case

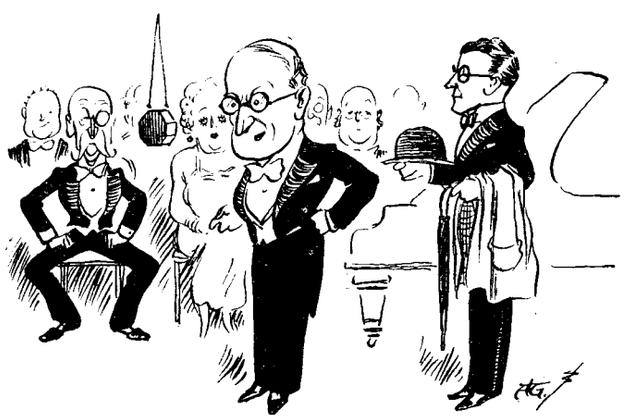

Had I responded to the invitation . .

If I have spoken with more than my customary warmth on this matter I apologise, but I feel very strongly about it.

CURRENT TOPICS

Events of the Week in Brief Review

Nearly Seven Millions

THE number of British radio licences in force at the end of December was 6,780,570, compared with 5,974,150 a year ago.

New German Interval Signal

DEUTSCHLANDSENDER, Stuttgart, and other German stations have adopted bars from the tune "Deutsch ist die Saar" as interval signal.

Ultra-short-wave Beacons

EXPERIMENTS with ultra-short-wave beacons are to be conducted by the Swedish airway company, Aerotransport. The air ports of Berlin, Hanover, and Cologne are already equipped with such beacons working on 9 metres.

Maison de la Radio

THE project of a Radio House worthy of Paris is again on the *tapis*. According to our Paris correspondent, it is rumoured that the Théâtre des Champs-Elysées may be transformed into a Palace of Broadcasting. The building actually incorporates three theatres, including one which is acknowledged as among the two or three finest in the world. If a decision is arrived at soon, the inauguration of the French Maison de la Radio might coincide with the opening of the 1937 exhibition.

Open to All

IT is good news that the Wireless Section of the Institution of Electrical Engineers now throws open certain meetings to all interested in the practical side of wireless. At these meetings informal discussions of a popular character are to be held. The following is the programme for the remainder of the present session.

January 29th.

Discussion on "The Cause and Prevention of Valve Failures in Broadcast Receivers," to be opened by Mr. T. E. Goldup.

February 26th.

Discussion on "Production Testing of Broadcast Receivers," to be opened by Mr. F. Murphy, B.Sc. (Eng.).

March 26th.

Discussion on "The Servicing of Broadcast Receivers," to be opened by Mr. A. Hall.

The meetings are held at 6 p.m. (light refreshments at 5.30) at the Institution, Savoy Place, Victoria Embankment, W.C.2.

Fruitful Week

DURING the one week in which the Czechoslovakian radio exhibition was recently held at Prague, one-third of the whole year's turnover of radio sets was sold, amounting to 90,000.

A New Radio Morocco

ACCORDING to *La Vie Marocaine*, Radio Maroc has this week increased its power to 25 kilowatts with the object of being heard in Western Europe. The station operates on 499.2 metres and should be well worth listening for.

Paris Short-wave Show

A SHORT-WAVE radio show is at present being held at the Centre Coloniale, 65-67, Avenue des Champs-Elysées, Paris, the closing date being January 31st. The exhibition emphasises the value of short waves in establishing closer relationships between France, her Colonies, and other countries. Demonstrations and talks are being given by experts.

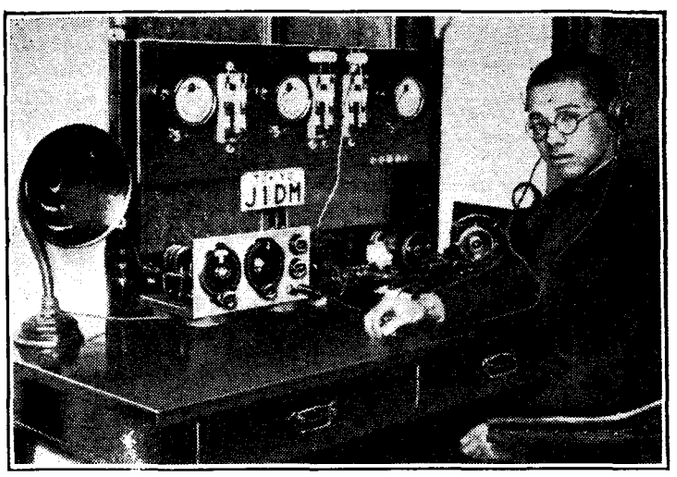

TOKIO CALLING. Mr. Seiichiro Handa, 56, Kitamisayi, Asakusa, Tokio, who is one of Japan's two hundred amateur transmitters. Since the picture was taken his call sign has been changed to J2GW.

Sir William Slingo

AS Engineer-in-Chief of the Post Office during the War, Sir William Slingo, whose death occurred last week at the age of 79, was closely associated with official wireless at a critical time. Soon after his retirement in 1919 he went to Peru on behalf of the Marconi Company to investigate proposals which led to a contract for the administration of the Peruvian posts, telegraphs and wireless services for 25 years. Later he joined the board of the Marconi International Marine Communication Company.

High Power from Iceland

THE power of Reykjavik will probably be increased from 16 kilowatts to 100 kilowatts in the near future.

Beauty and the Beasts

THE story of beautiful young Signorina Catrina Chiavera is told by the Rome correspondent of our Danish contemporary, "Hallo Hallo." Being extremely fond of radio music, she faced the city judges recently, having been sued by her neighbours for spoiling their night's rest with wireless music after midnight. The presiding judge found her not guilty, stating that "good music and song could never disturb any man." Not only did his Worship discharge the Signorina, but he fined the plaintiffs 500 lire for unnecessary lawsuit.

Germans and Henry Hall

THE relay to Germany on January 10th of Henry Hall and the B.B.C. Dance Orchestra has given rise to a comment among Berlin listeners.

Although they admired the band's performance, they regretted that no announcements were made in German. Prior to the relay from London there had been programmes from Budapest, Stockholm, and Buenos Aires. In each case announcements were made in German.

Peru Bans Amateurs

BECAUSE of alleged transmissions by amateurs of "news of an alarming and subversive nature," the Peruvian Government has decreed the suspension of all amateur radio station licences and the immediate confiscation of any violator's equipment as well as a fine.

"Group Allocation"

M. SIFFER LEMOINE, to whom reference was made in our editorial last week as the originator of the "group allocation" method of wavelength distribution, has been decorated by the King of Sweden with the order of "Nordstjarne" to mark the tenth anniversary of the opening of Swedish broadcasting. M. Lemoine is chief engineer of the Swedish Post Office.

Too Many Radios ?

MULTIPLICITY of radio receiver models is causing concern among American set manufacturers. Our Washington correspondent quotes the remarks of R. H. Langley, of New York, radio consulting engineer, who refers to "our failure to determine, even after fourteen years of broadcasting, just what a broadcast receiver should be. We are still changing the device in its basic specifications, and if with this has come refinement in electrical and mechanical design these have been the necessary results of the changes we have made, rather than the principal accomplishment of our plans and policies."

Farming and Wireless.

NEARLY all farmers are wireless users, if only to obtain weather forecasts and fat stock prices. At present there are approximately 140,000 people farming 50 acres or more in England and Wales.

Our associated journal, *The Farmer and Stock-Breeder*, now in the ninety third year of its age, has issued a certificate showing a net sale for the past twelve months of 110,249 copies per week.

This figure, having regard to the number of those engaged in the industry, illustrates the remarkable hold of the journal on the people it serves.

Television Prospects

How the British Service May Develop

IT is expected that the Television Committee's report will be published in a few days' time. A résumé of present technical possibilities, and also a reasoned forecast of the Committee's recommendations, is set out in this article

ALTHOUGH it is impossible to predict exactly what the P.M.G.'s Committee will recommend, it is still possible to make quite reasonable inferences as to the lines on which television seems likely to proceed under the stimulus of the Report.

Of purely technical matters the most important thing for the Committee to recommend is the number of scanning lines to be used. This, too, is accompanied by further implications of detail.

It is certain, both on grounds of the transmission channel and of the terminal apparatus, that nothing notably better than the present 30-line transmissions is possible on the medium-wave broadcast band. The obvious implication is that of a much higher scanning rate which instantly imposes such demands on frequency accommodation as to make it possible only in the 7-metre region. This has long been clear to technicians. It is, therefore, not very difficult to predict that the Committee will almost certainly recommend a 4/3 ratio picture scanned in not less than 180 lines at 25 frames per second.

The technical implications of this are considerable, but the absence of any authoritative guidance on this subject, giving definite lines for both the organisational and technical development of television, is possibly one of the most important reasons for the relatively slow rate at which television has appeared to progress in the past few years.

The essential point to be realised is the great fundamental difference between the transmission of sound and sight, not merely as regards the actual value of the frequency-band to be transmitted, but as regards the natural factors that set it. In the case of sound, definite frequencies are created by the mere production of the sound itself. But all the frequencies concerned are simply and directly governed by the sound itself, and we have no choice in the matter. Fortunately, the range of frequencies is not too great; 15 or 16 kc/s represent the very outside value of the highest harmonic contained in any of the sounds we hear.

But in the case of television we have no electrical frequencies which are simply and inherently related to or governed by the matter to be transmitted, as we have in sound. The maximum frequency involved in the transmission is governed jointly by the number of scanning lines and the rate of picture-presentation—the former by a square-law and the latter by a linear-law relation. As to the actual number of scanning lines required, the answer is "the more the better," and that is easier said than done. The square-law relation already stated means that the electrical frequencies involved become, in the limit, perfectly enormous.

By way of illustration, it is worth while to set out the various frequencies involved in a few typical scanning rates at 25 pictures per second. They are tabulated below.

From this it is clear that the electrical frequencies concerned are governed by the interpretation put on the number of scanning lines deemed necessary to give acceptable quality and definition, and that a practical limit within, at least, existing technique occurs at 180 or 240. It is certain that nothing in excess of 240 is likely to be envisaged in the Committee's Report, while it appears most probable that 180 will be recommended for immediate exploitation.

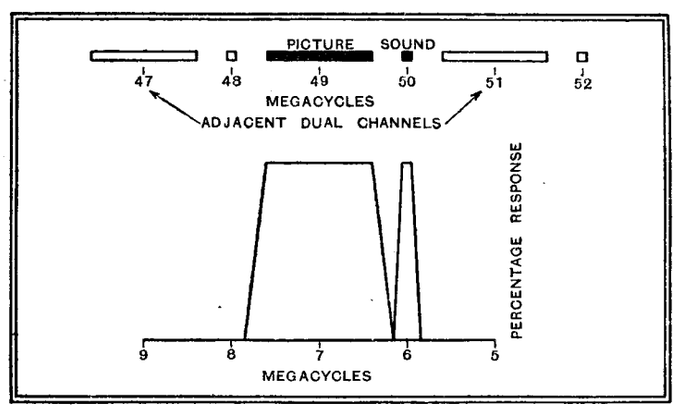

Fig. 1.—Dual sight-cum-sound television channel in the ultra-short-wave band.

Scanning Lines	Maximum Modulating Frequency (Cycles per sec.)	Total Band-Width Required on Radio Channel (Cycles per sec.)
30	15,000	30,000
60	60,000	120,000
120	240,000	480,000
180	540,000	1,080,000
240	960,000	1,920,000

Another inherent difficulty with high-scanning rates is the very short time the reproducing light-spot is on each minute element of the reproducing screen. This gives a serious reduction of illumination.

On both grounds, therefore, a practical limit is set. As stated above, 180, or even 240, lines seem practicable in the 6-7-metre region, but even then the problem of illumination is not simple, and is one in which future improvement is necessary. At present it seems to be generally accepted that available methods of picture reproduction are capable of giving sufficient illumination for at least a small-size picture. The really important point on which the Committee's recommendation is desirable is whether improvement in this respect should be allowed to delay the inauguration of a service which would have *some* value as domestic entertainment, leaving future development and improvement to take their own course.

From the information available it seems possible to suggest the immediate type of television channel which is likely to emerge from the Committee's recommendations. This is the arrangement of having the sound and sight carriers close to each other in the ultra-short-wave band, so as to permit the two carriers and their sidebands to be received on a single aerial. From the table given above it will be seen that the picture channel for, say, 180 lines must be one megacycle (or slightly more) in band width. Assuming this as a basis of illustration, a practicable arrangement for a group of television channels, combining sound and sight, suggests a separation of 1 megacycle between the carriers of each function, with a separation of 2 megacycles between combined channels. This suggestion, applied to a number of channels, is illustrated in Fig. 1, where we take 6 metres (50 megacycles) as a suitable carrier for the sound, with the picture carrier at 49 megacycles (6.122 metres). These are shown in their appropriate positions, with the two possible adjacent combined channels, in the upper part of Fig. 1.

The method of reception is shown in Fig. 2. The sound and sight carriers of the desired channel are received on one aerial, whose tuning is made sufficiently broad to accommodate them. They are heterodyned by a common local oscillator

Television Prospects—

of 55 megacycles to give mean intermediate frequencies of 6 megacycles (sound) and 7 megacycles (picture). These intermediate frequencies and their appropriate sidebands are accepted and amplified by IF amplifiers centred on 6 and 7 megacycles respectively. The necessary bandwidth characteristics of these amplifiers are shown in the lower half of Fig. 1, related to the position of their respective carriers before heterodyning.

The tuning of the aerial system and of the common local oscillator can be ganged to give one-knob tuning control for domestic operation, tuning being checked by the audio response, which is, of course, much the sharper and more easily judged.

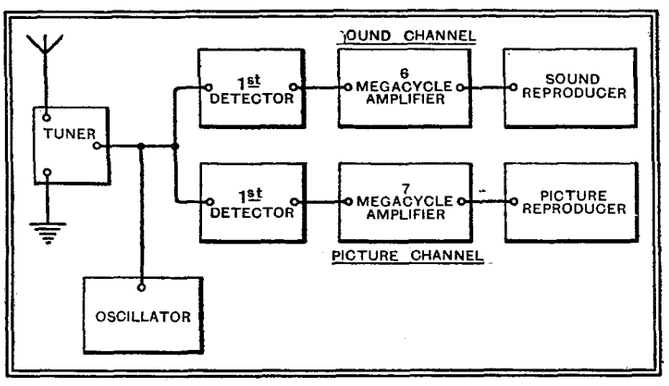

Fig. 2.—Sight-cum-sound receiver on common aerial.

Such is the television channel which one envisages as emerging from the Committee's Report. How soon it will be realised as a working service is another matter, involving a psychic rather than a technical prophet. But the fact remains that the technical developments on these lines have gone quite a long way.

Methods rather than "Systems

The Committee can hardly lay down the law on the particular method of picture reproduction to be used at the receiver. But it can very definitely recommend the method of synchronisation to be used; indeed, a definition of this is one of the most important points to be looked for, either implicitly or explicitly, in its Report. Present technical tendencies undoubtedly indicate that this will be in the nature of impulses, corresponding to line scanning and framing, sent out with the picture-modulation signals, received with them, and later separated from them by some form of discrimination, most probably amplitude discrimination.

Whether or not an actual recommendation on the subject is given, it seems certain that picture-reproduction at the receiver will, in the first place at least, be by cathode-ray tube. All technical pointers are in this direction. A detailed discussion of the merits of cathode-ray reception is impossible in this article, but its main features of high-speed scanning, high-frequency modulation response, and ease of synchronisation by purely electrical means give it an enormous pull as an immediate solution. The main disadvantages are those of size of picture and limitation of illumination. Work on both of these is, of course, in progress, and possibly a small or relatively small tube with intense illumination capable of optical enlargement and projection is the final solution.

In all the respects discussed above, it is common knowledge that most television concerns have been working on closely parallel lines. It is for this reason that the matter now reduces to one of detailed "methods" rather than of any particular or unique "system." The Report of the Committee must necessarily tend to make this more true than ever, and to ensure that the methods recommended are on lines such as to unify future development while still leaving adequate scope for individual effort. The details so far considered have all particular bearing on the receiver and on the possibility, not so much of *standardising* the receiver as such, but of specifying the performance which it has to fulfil.

Intermediate Film Scanning

Turning to methods of scanning at the transmitting end, there is perhaps less possibility of immediate uniformity, and greater scope for individuality. In the very first place, it seems almost certain that transmission will be by film. This does not necessarily mean always "cold-storage" in celluloid for any time, but the mere interposition of film as a convenience arising out of technical limitations. The television scanning of film (instead of the direct object) offers an easy and immediate solution of many problems.

The general principles of the "intermediate film" method are shown in Fig. 3. The time-interval between the taking and scanning can be as low as about 6 seconds, or about 20 seconds using an endless loop of film. Scanning method may be either by cathode ray or mechanical means, and both are in a high state of development.

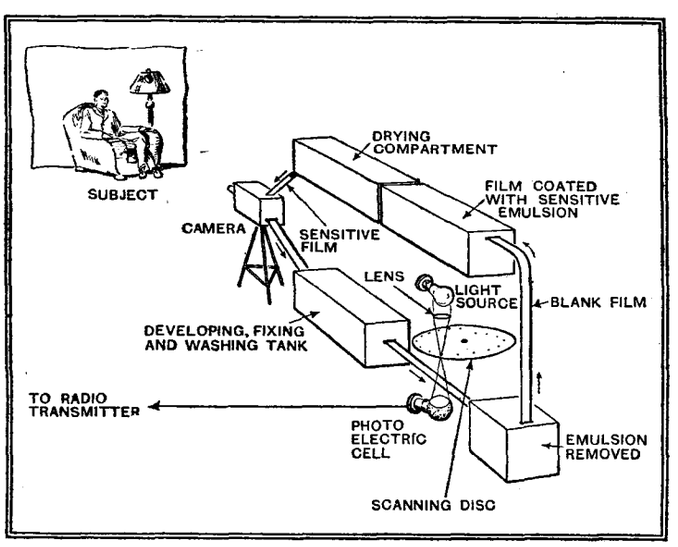

Fig. 3.—"Intermediate-film" method of scanning.

The scanning of direct scenes, either in studio or outdoors, appears to be in a less developed state, which is, of course, the reason for intermediate film. Again, either mechanical or cathode-ray methods may be used. Of the mechanical methods perhaps the most valuable is the "light-spot" method of the Baird Company, in which the subject is traversed by a spot of light, with a light-sensitive cell so placed that light reflected back from the scanning spot falls on it. At least two cathode-ray methods of direct scanning have been devised; the "Iconoscope" of Zworykin and the "image-dissector" of Farnsworth. Unfortunately, no great amount of information is available on the extent to which these have proved successful in practice, but both have considerable promise.

In conclusion, it is interesting to speculate how far-reaching may be the effect of the P.M.G.'s Committee. Its first and obvious effect will be to standardise development tendencies in this country and to specify the nature of the signal to be sent out for the operation of the receiver. But its effects seem likely to reach beyond the confines of these islands. The Committee has inspected current methods in Germany and America, as well as in this country, so that its recommendations will carry authoritative weight on international evidence, and will, no doubt, be accepted as such in other countries.

BOOK RECEIVED

The Broadcaster Radio and Gramophone Trade Annual, 1935.—A reference book for the wireless trade only. The directory section is arranged under headings of firms, products or services, and trade names, while the constitution and activities of the various associations connected with broadcasting are recorded. Brief biographies of personalities in the world of wireless appear in the "Who's Who" pages, and information is given on legal questions. Chapters devoted to technical matters deal with receiver servicing, testing and design, etc.

Published by the Broadcaster and Wireless Retailer, 29, Bedford Street, London, W.C.2. Price 5s., post free.

New Apparatus Reviewed

Recent Products of the Manufacturers

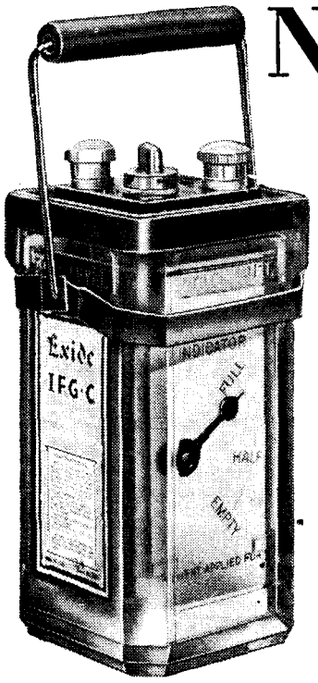

New Exide LT cell, the type IFG-C fitted with "Ironclad" positive plate and charge indicator.

NEW EXIDE ACCUMULATOR

AN interesting addition has been made to the Exide range of small two-volt cells in the form of a new battery described as the type IFG-C. This is fitted with a positive plate similar in construction to that used in the "Exide Ironclad" submarine and traction batteries. It is very robust, has a greatly increased life, and is claimed to hold its charge longer than the usual pattern fitted to wireless accumulators.

The principal feature of the "Ironclad" plate is that the active material is held in position by finely slotted ebonite tubes, and whilst these allow free access of the electrolyte the active material is prevented from loosening or disintegrating.

The new cell is identical with the DFG mass-type battery, and its capacity is 45 amp. hours. It incorporates the new Exide charge indicator, consisting of a pivoted pointer that moves over a white scale engraved Full, Half and Empty. This we found to be very reliable, and affords an accurate indication of the charge in the cell.

The makers are Exide Batteries, Exide Works, Clifton Junction, near Manchester, and the price is 11s. 6d.

AMPLION RESISTORS

A NEW range of wire-wound resistors rated at one watt has been introduced by Amplion (1932), Ltd., Rosoman Street, Rosebery Avenue, London, E.C.1, the sizes made extending from 50 ohms to 100,000 ohms. Resistors up to 50,000 ohms are wound on a glass tube $\frac{5}{16}$in. in diameter and one inch long, but the higher values have somewhat larger dimensions. The wire is protected by a heat-resisting enamel and the standard colour code is adopted for indication of resistance value.

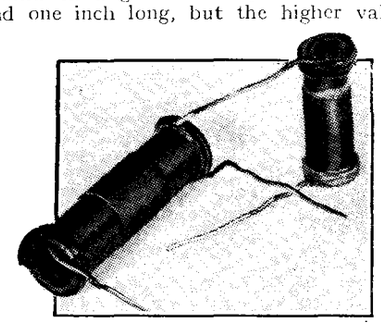

New Amplion one-watt wire-wound resistors.

Out of eight specimens tested, one only deviated by more than 6 per cent. from its marked value, while the average difference was less than 5 per cent. The temperature of the resistors does not rise above the normal for this rating, and they will stand a considerable overload without damage. Double the normal current with several of the specimens tested caused the enamel to soften and discolour, but the resistance did not show any change after it had cooled. As they are wire-wound the resistance does not change to any appreciable extent when warm, the maximum change recorded with a 50,000-ohm specimen being of the order of 0.5 per cent. when dissipating the rated watts.

Amplion resistors are provided with wire-ends and they cost 1s. each.

BROWN'S DROITWICH FILTERS

WM. F. BROWN RADIO, LTD., Ossillo Radio Works, Brierley Hill, Staffs, market two filter units for joining in series with the aerial to effect a reduction in the input to the set on 1,500 metres, and so restrict the "spreading" of Droitwich that reception of other long-wave stations can be effected without interference by this high-power transmitter.

Filter unit No. 1 embodies a single circuit pre-tuned to 1,500 metres, and is a simple form of rejector; it is stated to give a reduction in signal strength at resonance of 30 decibels, and the price is 6s. 6d.

The D3 model is a three-circuit filter incorporating an adjustment for controlling the degree of attenuation, and this has a range of from 40 to 112 decibels, the price being 15s. 6d.

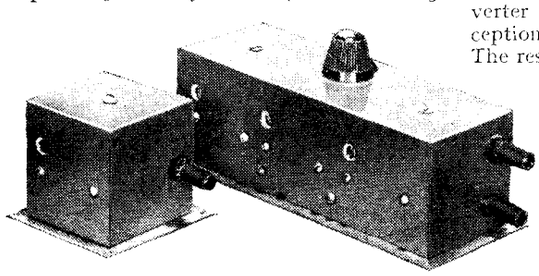

Brown's Droitwich filter units; the larger model is fitted with a rejection control.

Both models have been tested and found quite satisfactory, they are accurately adjusted and should prove very helpful to those who experience difficulty in receiving long-wave broadcast when Droitwich is working. The units are enclosed in copper screening boxes finished in brown enamel.

R.I. ANTINODAL SHORT-WAVE CONVERTER

THE Antinodal short wave converter is now made as an AC model, the unit being entirely self-contained and embodying its own HT supply unit, for which purpose a Westinghouse rectifier is employed.

It is a single-valve converter functioning as a superheterodyne frequency changer of the autodyne type. A comparatively low intermediate frequency amplifier is, therefore, indicated, and the receiver with which it is used should be tuned to 2,000 metres or so to obtain the best performance.

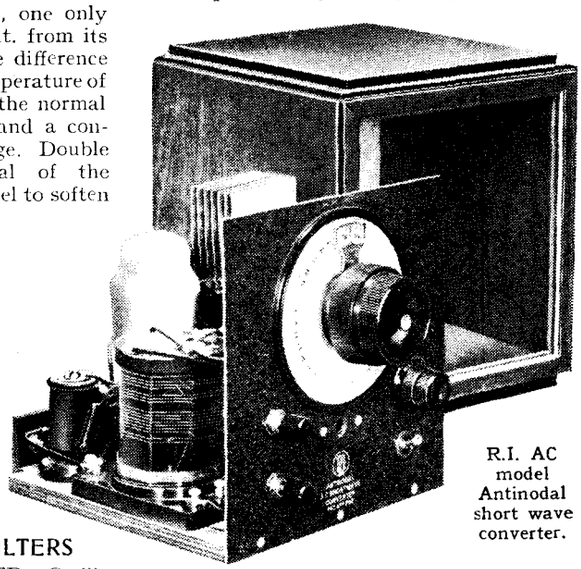

R.I. AC model Antinodal short wave converter.

It is simple to install as no alteration whatsoever has to be made to the broadcast set, it being only necessary to transfer the aerial and earth wires to the converter and replace them by the two leads passing through the back of the unit. A separate AC mains lead is fitted, and this can be connected to the same supply point as the set by using a two-way adaptor.

Tests have been made with the converter and several broadcast sets, and exceptionally good results obtained with all. The results depend largely on the sensitivity of the receiver, which is quite understandable since the unit is essentially a frequency-changing stage and does not contribute much to the overall amplification.

Using an average broadcast superhet, American short-wave stations are receivable at good volume from late in the afternoon unless conditions are unfavourable.

The wave range of the unit is from 13.5 to 92 metres, covered in two steps, and there is a good overlap between the two bands. A push-pull switch changes from one band to the other, and there is an additional switch of the same pattern to compensate for long and short aerials. Incidentally, a quite short aerial will serve if needs be, and a good crop of stations can be received using an indoor aerial.

Tuning requires a little care as the variable condenser is of larger capacity than customarily used on the short waves, but the good slow-motion dial helps materially.

The unit of Radio Instruments, Ltd., Purley Way, Croydon, Surrey, is well made and housed in a neat walnut-finished case. The price is £6 complete.

Short Waves and the Amateur

THE STABILISATION OF HIGH FREQUENCIES

II.—Crystal-controlled Oscillators

By G2TD and G5KU

(Concluded from page 76 of January 18th issue)

A HIGH standard of frequency stability in periodic electrical oscillations is as difficult to achieve as perfect time keeping. Given a pendulum, and other necessary mechanism, anyone with a fair horse sense of mechanics could construct a clock which would keep good time over a fair period, but could never be used in an astronomical observatory. In the same manner, electrical periodicity requires some form of superfine control and stabilisation if extremely constant frequency is essential.

It is difficult to construct a radio frequency oscillating circuit whose decrement would be comparable with even the worst form of pendulum, and since low decrement is one of the fundamental essentials for frequency stability, one must resort to other methods of achieving this feature.

Certain "assymetric" forms of natural crystals have the property of generating electromotive forces when subject to mechanical pressure, a phenomenon which may be readily reversed. Practically perfect elasticity, together with this piezo-electric effect, renders the crystal form of quartz ideally suitable for controlling electrical oscillations, as it may be made to simulate tuned circuits with decrements far lower than may ever be obtained with combinations of electrical inductance, capacity and resistance.

Resonant Frequency

In addition, the dimensions of mass and elasticity in this crystal is such as to permit of resonant conditions at frequencies ranging from as high as 20 million cycles per second down to comparatively low radio frequencies.

A bar or plate cut along a suitable axis from the natural crystal, and having perfectly parallel faces, will possess a resonant frequency, corresponding to a wavelength of 105 to 150 metres per millimetres of thickness.

There are several methods of using these crystals to stabilise high-frequency oscillations generated by valves, and two well-tried arrangements are depicted in Fig. (1) a and b.

In Fig. (1a) the crystal is connected between the grid and filament of a triode, and the plate contains a tuned circuit. This tuned circuit is required only for the purpose of producing a reasonable anode load impedance at the crystal frequency, and may be replaced by a pure resistance without affecting the ability of the system to produce electrical oscillations.

In action some of the energy in the anode load impedance or resistance is transferred to the grid, via the anode grid capacity. The presence of the crystal, which may be simulated by an electrical network, enables potentials of opposite phase to appear between the grid and filament of the triode. Unstable energy equilibrium results, and the system commences oscillating at a frequency controlled very nearly completely by the mechanics of the crystal alone and practically independent of wide changes in the operating characteristics of the triode.

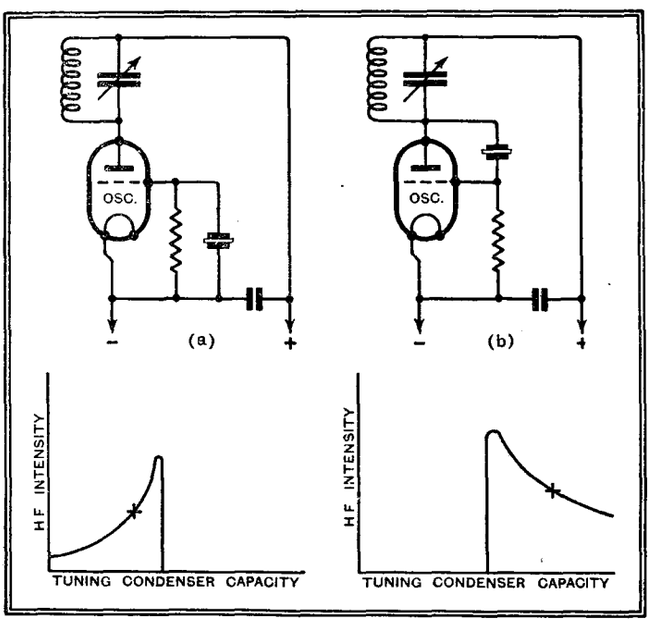

Fig. 1.—(Above) Two well-tried arrangements for crystal control of an H.F. oscillator, and (below) the accompanying curves showing relation between H.F. output and tuning capacity.

In Fig. 1 (b) the crystal is shown connected between grid and anode, and although the mechanism whereby oscillation is established is identical, the equivalent effective circuit of the crystal is modified for reasons rather beyond the scope of these notes. The accompanying curves indicate the manner in which the high-frequency output across the anode load impedance varies with the tuning capacity. It will be seen that oscillation suddenly ceases as a maximum is reached, in the case of the parallel fed crystal, and at a minimum for the grid anode crystal location. These curves represent quite a large variation of capacity, sufficient in a normal oscillator to produce frequency variations of 25 per cent. or more. In the case of the crystal-controlled oscillator, this change may be much less than 0.1 per cent.

Much has been written with regard to the perfections of frequency stability in crystal-controlled oscillators, and it is therefore well to consider the limitations of the system.

Either type of circuit arrangement illustrated here will give practically equal output or stability, although some abnormal condition of load or valve capacity may cause a preference for one particular arrangement.

Naturally a quartz crystal has mechanical limitations and may only be expected to dissipate a certain amount of energy. Excessive energy dissipation in the crystal will cause overheating of the crystal and/or ultimate fracture, the latter particularly applying to the thin plates used on short wavelengths.

It is generally considered safe to use as a power oscillator a valve with a voltage magnification of 10 to 20, with an anode voltage of 250, and a grid leak of not less than 20,000 ohms. As a safe check on this arrangement the high-frequency current passing through the crystal should not exceed 150 milliamps.

One of the most serious causes of frequency drift in crystal-controlled oscillators, is due to temperature variations of the crystal while operating. Naturally, since the resonant frequency is determined by certain mechanical dimensions, the contraction or expansion of the crystal as a whole will produce alterations of the crystal's resonant frequency.

Such drifts may be eliminated by enclosing the crystal in a thermostatically-controlled oven, whereby a constant operating temperature is assured.

Although it is now possible to obtain crystals for direct control on 20-metre transmitters, it is advisable to select a 40-metre crystal of half the desired frequency, and use it as a master oscillator. The output from this oscillator is then doubled by a valve, arranged to rectify, and with a tuned 20-metre circuit as its anode load impedance. The 20-metre output so pro-

Short Waves and the Amateur—

duced may now be finally amplified and passed to the aerial feeders. This arrangement assists in preventing violent load fluctuations on the crystal and its attendant dangers of producing crystal fracture, and frequency drift due to temperature variation while keying.

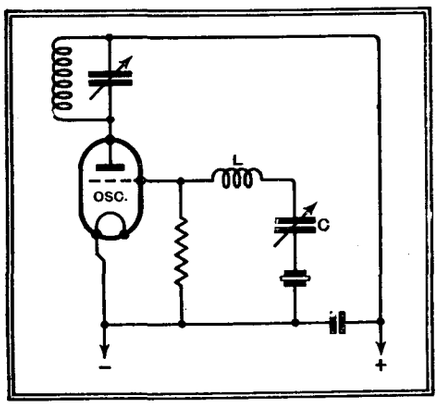

Fig. 2.—Crystal-controlled master oscillator circuit; condenser C allows a small variation of frequency.

It is possible to purposely introduce sufficient frequency drift in a crystal-controlled oscillator to remove audible heterodyne frequency from an interfering source. Assuming that a transmitter operating on 14,200 kc/s is being interfered with by a neighbouring transmitter on 14,201 kc/s, a thousand cycle heterodyne note will be interfering with the reception of the desired transmission. If the 14,200 kc/s station could produce a 5 kc/s frequency reduction, and thus increase the heterodyne note to 6 kc/s, the acoustic interference would be greatly minimised.

It is not difficult to realise this in practice, and the circuit of Fig. 2 may be used with fair success for the master oscillator of a low-power amateur transmitter. The coil and condenser L and C are selected to tune at the crystal frequency and the L/C ratio is kept as high as practically possible. Frequency variation is effected by varying C, and quite useful deviations may be accomplished.

This circuit is similar in arrangement to that used in beam telephone circuits, where the carrier frequency is purposely wobbled by driving C with a motor. This wobbling is produced to prevent the reinversion of the telephony sidebands by simple receiving apparatus.

Random Radiations

By "DIALLIST"

Broadcasting in India

THE announcement that a 20-kilowatt broadcasting station is to be erected forthwith at New Delhi is welcome news, for hitherto India has been badly off in the matter of broadcasting. The only existing stations in the country are small affairs with very limited service areas. The New Delhi station can hope to cover only a tiny fraction of the entire area of the country, but it is a beginning, and therefore all to the good.

Comparatively few people realise the vastness of India. Europe, excluding Russia, requires over two hundred stations, many of them high-powered, to provide its broadcasting services; but the whole of Europe could be packed comfortably inside India, and there are few Indian provinces which are smaller than France, Germany, or Great Britain. For such a gigantic country, containing one-sixth of the world's population, and with hundreds of different languages and dialects, a huge network of transmitting stations will eventually be required.

Receiving Europe's Programmes

At the present time the majority of those who have wireless sets in India rely mainly upon European stations, and in some parts reception of those operating on the medium and long wavebands is remarkably good. Some time ago I presented a simple all-wave set to a young relative of mine who is stationed near the North-West Frontier, and he tells me that, except at times when atmospherics are bad, he is able to bring in numerous medium-wave and long-wave transmissions.

The great standby of the Briton in India, however, is the Empire short-wave station at Daventry. Most of us know something of the queer little ways of short-wave transmissions, and I need hardly say that loud and clear reception of the Empire station is not a certainty, though more often than not the news bulletins, the relays, the running commentaries, and the music come in well enough to provide real entertainment. Naturally, when you are stationed a couple of hundred miles from anywhere you are not over-critical of the quality of reproduction.

The Mighty Army of Listeners

DURING December the increase in the number of wireless licences was as near as makes no matter 120,000. The total number of licences in force at the end of last year was 6,780,570, an increase of 806,420 for the twelve months between January 1st and December 31st, 1934.

A good many years ago, when receiving licences numbered round about a couple of millions, there were many who suggested that saturation point had almost been reached. How much in error their prophecies were the subsequent figures of annual increase show. Some time since I put down the saturation point at something in the neighbourhood of eight millions, and that is, I think, much nearer the mark.

This year no enormous increase is likely, since, except for the Droitwich transmitter of the Regional programmes, 1935 will probably not see the coming into action of any new high-powered stations serving densely populated areas. We shall certainly go beyond the seven-million mark before the end of the year, and thereafter recruitment to the great army of wireless listeners will proceed steadily, but at a much slower pace.

The Television Report

A HINT about the lines of the eagerly awaited report of the Committee which has been enquiring into the development of television in this country was given the other day by the Postmaster-General, Sir Kingsley Wood, during his address to the Bath Chamber of Commerce. After speaking of the historic step forward made by the Government in the inauguration of a national broadcasting service concerned with speech and music, he hinted at the possibility of there being "a sister service which will enable the eye as well as the ear to be reached."

There can, I think, be little doubt that the report, when it is published, will be found to contain a recommendation that a service should be started as soon as possible. Wavelengths between 5 and 8 metres will probably be employed, and my forecast is that the service would be built up gradually.

The service area of an ultra short-wave station is small; scores of them would be required to cover the whole country. I predict that a start will be made with the London district and that the service will be extended as soon as possible, first to the more densely populated areas, and then to other parts of the country.

A Wonderful Cable

When the project for a vast network of ultra short-wave television transmitters was first mooted there was one great difficulty in the way; owing to the enormous width of the frequency band required for high-definition television there seemed to be no possibility of relaying, as in the case of ordinary broadcasting, by means of telephone land lines. It appears therefore that each television transmitter would have to be within wireless range of its next-door neighbour—which for the ultra short-waves means almost in sight of it—so as to be able to pick up and retransmit the programmes.

It seems that this difficulty has now been overcome by an amazing new type of cable which has been developed. However carefully they are balanced, two telephone lines can handle a frequency band of only a few kilocycles. The new type of cable can deal with a frequency range equal to about half of that contained in the entire medium-wave broadcasting band. It is therefore suitable for the relaying of high-definition television. It would be possible to "televise" from transmitters in Birmingham, Edinburgh or Manchester events taking place in London.

The great snag at the moment is the cost of such cables. However, both this and the money necessary for erecting television stations can be found if the General Post Office agrees to hand over to the television authority, say, 1s. 6d. of each receiving licence fee.

At present the B.B.C.'s share of each 10s. in round figures is 4s. 6d., and that of the G.P.O. 5s. 6d. If 1s. 6d. is devoted to television the G.P.O. will still get 4s., and that, on some seven million licences, tots up to no mean sum.

Who Should Pay?

THERE are still many listeners who do not know that when their reception of the broadcast programmes is interfered with by unwelcome noises due to flashing signs or electrical machinery a report should be made to the G.P.O. The procedure is simplicity itself. You simply go to the nearest Post Office, ask for the appropriate form, fill it in, and hand it back.

If the Post Office considers that a good

case has been made out by the complainant an engineer is sent down to investigate. More often than not he finds that the bulk of the interference is caused by one particular piece of apparatus and that its misdeeds are easily preventable by the use of suitable suppressor devices.

But now comes the knotty point. Since there is no law against the radiation of interference, the Post Office cannot compel the owner of offending apparatus to render it innocuous—or de-parasite it, as the French say. The cost of the necessary suppressors is not, as a rule, great, and often the owner of the machinery, or whatever it may be that causes the trouble, is willing to meet the expense. Sometimes, though, he is not, and the best way in such cases is for all the listeners concerned to club together and find the small amount required. Usually such questions can be settled amicably, but I have come across cases where no agreement could be reached, and these serve to show how necessary it is for us to have anti-interference legislation without delay.

Aircraft Radio Telephony

IT is announced that two new wireless stations for communication with aircraft are soon to be opened at Lympne, in Kent, and Pulham, in Norfolk. At present the bulk of the work of aircraft control by telephony has been done by Croydon, but the number of aeroplanes fitted with receiving sets for telephony has grown so enormously that relief transmitters are needed.

Both Lympne and Pulham used telephony a good many years ago, but for some time now all of their communications have been made in morse.

I wonder how many readers remember the early days of wireless, when the only regular broadcast programmes were the daily concert from the Eiffel Tower and the hour of entertainment given once a week on Tuesday evenings by the half-kilowatt Marconi station at Writtle? In those days the happy few who owned receiving sets had to rely largely for telephony on amateur transmissions and on the aircraft stations at Croydon, Lympne, Pulham, St. Inglevert, Le Bourget, and Antwerp.

A feat which used to fill us with pride in the marvellous sensitiveness of our sets (and, it must be mentioned, our own skill in tuning!) was to pick up Croydon calling Antwerp and then Antwerp's reply on a slightly different wavelength. A still bigger thrill was to hear one of the air stations calling a 'plane in the air and then to bring in the pilot's reply.

It's Simpler Now

Only old hands can appreciate fully the enormous strides towards simplicity of operation that wireless has made in the few short years that have passed since the pre-broadcasting era. I was looking the other day at a photograph of the first five-valver that I built somewhere about 1920. Its panel contains not only the valve holders and the mount for the swinging coils, but also about a score of knobs, each of which really did something.

Curiously enough, three knobs which appear in many of the most up-to-date sets were absent in those of the early days. There was no wave-change switch; you pulled out one set of coils and plugged in fresh ones when you wanted to go from medium to long waves or vice versa. There was no volume control, because you generally needed all the volume that the set would give. There was no tone control, because, if I may so put it, there was no tone to control!

What would present-day wireless enthusiasts think of rheostats (one for each valve), variable-resistance grid leaks or potentiometers, whose chief use was to hold down a set that was liable on the slightest provocation to be a howling, squealing horror?

ON THE SPOT

Visits to Foreign Broadcast Stations

XXI.—Helsinki (Finland). 335.2 metres, 895 kc/s, 10 kW.

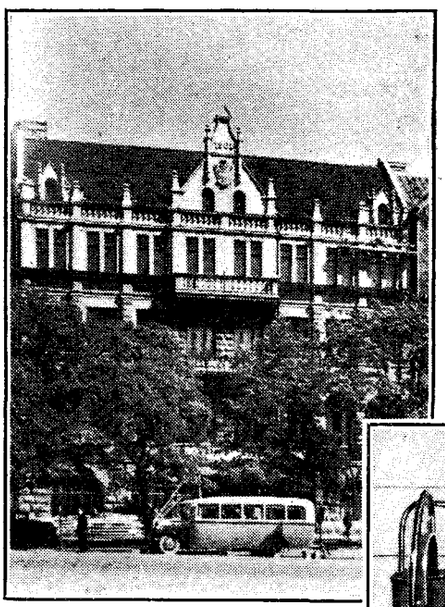

BROADCASTING HOUSE, Helsinki, was formerly a bank. The lower photograph shows the large orchestral studio.

WHEN I visited Helsinki I discovered that great things are being planned for Finnish broadcasting and that British listeners will soon be hearing Northern programmes from a new 220-kilowatt transmitter replacing the present plant at Lahti and working on the existing wavelength of 1,807 metres (166 kc/s.). This will be the outcome of the creation of a new State corporation named O.Y. Suomen Yleisradio A:B, which has developed from the original private company "Finlands Rundradio." The new company is 90 per cent. State controlled, the remaining 10 per cent. of the shares being held by various public organisations.

Lahti is to Helsinki what Droitwich is to London. Although the high-power transmissions will go out from Lahti, the hub of the system will be at Helsinki, where the registered offices are situated as well as an imposing set of studios. The station building was formerly a bank house, but with the elimination of room partitions several very large studios have been created; the large orchestral studio is as impressive as any to be found in Northern Europe.

The chief announcer at Helsinki tackles the News Bulletin.

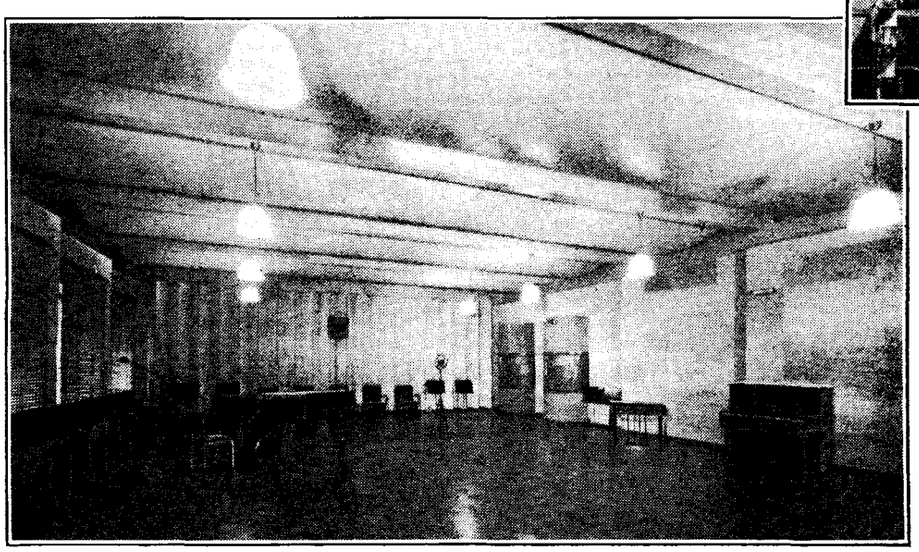

The talks studio is extremely comfortable and is fitted with a loud speaker enabling the control engineer to give words of instruction and encouragement before the speaker gets into his stride.

The programmes, which are at present radiated by both Lahti and Helsinki, are well worth the attention of listeners in Great Britain. Orchestral music is especially welcome in this land of lakes and snow.

NORTHERN WANDERER.

★ ★ Listeners' Guide for the

Outstanding Broadcasts at

MRS. JACK HYLTON AND HER BOYS take part in "Music Hall" to-morrow night (Saturday) in the National programme at 8.30. The picture shows Mrs. Hylton and part of the band, which numbers thirteen performers.

WORTH WAITING FOR.

"BREATHES there the man with soul so dead" who has never nourished the idea of a perfect broadcast item? It may be Harry Tate in "Motoring," the Wireless Military Band in the "William Tell" Overture, or G. D. Cunningham in Bach's great A Minor Fugue. Moods change, but at the moment no notion attracts me more than that of Sir Thomas Beecham conducting the Royal Philharmonic Orchestra in Beethoven's Fifth Symphony (C Minor). The idea becomes reality at 9.45 on Thursday next, January 31st, when the second part of the Royal Philharmonic Society's concert will be relayed from the Queen's Hall (Regional). The first part of the concert at 8.15 includes Mendelssohn's "Italian" Symphony in A, and the Sibelius Symphony in A Minor.

A FAMOUS TRAGEDY.

RUTLAND BOUGHTON'S "Immortal Hour" brought its composer fame, chiefly for the elusive and romantic element in his music. These qualities make him the ideal collaborator in Thomas Hardy's famous tragedy of "The Queen of Cornwall," which is to be broadcast in the National programme on Wednesday next, January 30th, at 8. This will be Rutland Boughton's own special version for broadcasting.

JUDGE JEFFRIES.

COURT scenes almost invariably make good broadcasts and, generally speaking, only the witness fails to enjoy a brisk cross-examination. Cross-examination, with emphasis on the *cross*, is the key-note of the Famous Trial of Dame Alice Lisle before the notorious Judge Jeffries. The broadcast reconstruction, prepared by Whitaker Wilson, will be heard on Monday (Regional, 8), and Tuesday (National, 8), with Dame May Whitty as Lady Lisle. Norman Shelley takes the part of Pollexpen, Counsel for the Prosecution, while D. Hay Petrie will represent the Lord Chief Justice.

The trial will reveal how far the treatment of witnesses has progressed in the English Courts of Justice since 1685.

SYMPHONY CONCERTS.

THERE are some promising symphony concerts this week. The Warsaw Symphony Orchestra will play Rimsky Korsakov's "Schéhérazade" on Monday, January 28th, at 8 p.m. The same evening at 8.30 Brussels 1 has a Bach Festival which will include his Second Concerto in E, and songs by Frederick Anspach, while from 9.35 to 11.0 the Leipzig Symphony Orchestra, conducted by Hilmar Weber, will play compositions by Grimm, Grossmann and Trapp, as well as variations on Folk Songs.

On Tuesday, January 29th, at 9.0 Brussels II Radio Orchestra will play symphonic extracts from "Peer Gynt," while also on Tuesday, at 9.15, Kalundborg's Radio Orchestra will give an interesting concert of French music. On Thursday at 7.10 the station gives its usual excellent Thursday concert at which the orchestra, conducted by Fritz Busch, will render a Wagner programme.

The French National Orchestra, conducted by Inghelbrecht, will give a Symphony Concert at 8.45 on Thursday from Radio-Paris. The soloists are Lily Laskine (harp) and Marcel Moyse (flute), and the programme includes Mozart's Flute and Harp Concerto.

"CROSSWORD PUZZLES OF THE AIR."

GERALD COCK, Director of Outside Broadcasts, assumes responsibility for the second programme of "Quatrains," or "crossword puzzles of the air," which occurs in "Entertainment Hour" to-night, Friday (National, 8.30).

During the evening listeners will be plied with six queries, five of which are to guess the location of certain sounds, heard in outside broadcasts, from the actual places described in the "Quatrains."

The sixth "Quatrain" refers to the voice of the programme narrator. Listeners will be asked his identity and will be aided in their detection by a fairly obvious "Quatrain." No prizes are offered, but Mr. Gerald Cock would like to know whether listeners found the posers too hard or too simple.

MASCAGNI'S NEW OPERA. The relay of "Nerone" by all Italian stations from the Scala, Milan, on January 27th and 31st, is perhaps the most important musical event of the week. Our picture shows the composer (seated) with the artists taking part. (Left to right): M. Marzollo, Margherita Carosio, Aureliano Pertile, Lina Bruna Rasa and Apollo Granforte.

Week

Home and Abroad

MUSIC AND FUN.

THE atmosphere of the musical play "Love Needs a Waltz" can be judged by the names of the principal characters. We have the dashing Prince André of Waltzenburg (Bruce Carfax), Alonzo B.

"LOVE NEEDS A WALTZ." Anne Ziegler, the Liverpool singer, who takes the star part of Linda in James Dyrenforth's musical play to be broadcast on Wednesday, January 30th. (Regional, 8.)

McNulty, a music publisher (Ben Weldon), and Linda, his daughter (Anne Ziegler). The author of the play, which is being revived on Thursday (National, 8) is James Dyrenforth, who is always funny, and the music is by Kenneth Leslie Smith.

Anne Ziegler is a Liverpool singer who came to London only three months ago.

OPERA.

OPERA lovers often grow dazed when they turn the knobs in search of their favourite art form. Every station appears to be giving opera, and the devotee is unable to settle down to any one transmission for fear that he is losing something better from another. Thus, the evening is frittered away, till only dance music is left.

This week is full of such difficulties, for opera is plentiful. On Sunday, January 27th, at 8 o'clock, we can listen to Offenbach's "La belle Hélène" from Radio-Paris, or from 6.20 to 8.30 to "Jabuka" by Johann Strauss, broadcast from Leipzig.

On Monday we can choose between a concert version of "Katherine Ismailova" by Schostakovitch from Moscow No. 1 at 7 o'clock, and Gounod's "Mirella" from Radio-Toulouse at 9.

The Hahn Concert from Radio-Paris on Wednesday at 8.0 is in two parts, the first consisting of the opera, "La Carmélite." The second part is the "Divertissement pour une fête de nuit," conducted by the composer.

OPERA IN ENGLISH.

LISTENERS who insist on opera in English, whether its origin be Italy, Germany, America, or Japan, will tune in Athlone at 7.31 p.m. to-morrow evening (Saturday) when "La Bohême" (Puccini) is to be given by the Station Orchestra and soloists.

GORDON AT KHARTOUM.

AUTHORS have told me that some stories "write themselves." Once in a blue moon Heaven sends a plot or theme so good, so compelling, that the only job left is to put it on paper.

Peter Creswell, the B.B.C. producer, must see the story of General Gordon in the same light; the drama is ready to hand. In to-morrow's broadcast of "Gordon at Khartoum" (National, 10) this quickly moving tale of tragedy and heroism will be told by the voices of Gordon, Gladstone, Sir Evelyn Baring (late Lord Cromer), W. T. Stead (Editor of the *Pall Mall Gazette*) and others.

CHIPPING CAMDEN v. BROADWAY.

A TUG of war between villages of Worcester and Gloucestershire suggests an exciting half-hour on Wednesday next (Regional, 8). The struggle, in which the protagonists will be Chipping Camden (Gloucester) and Broadway, will be a verbal one and will be relayed from the Lygon Arms Hotel, Broadway.

A GUID NICHT.

WHAT would happen if the B.B.C. forgot "Burrrrrns Nicht"? As I want to keep this page a happy one let me hasten to say that the Immortal Memory is duly toasted this evening (Friday) in a special programme (Regional, 8.15) devoted to song and poetry.

One of these days England may have the effrontery to transmit a Shakespeare programme to Scotland.

THE AUDITOR.

THE GORDON STATUE, originally erected in London and now at Khartoum. The 50th anniversary of General Gordon's death is the occasion of a special broadcast to-morrow (National, 10). Below: Last lines of Gordon's diary, Khartoum, December 14th, 1884.

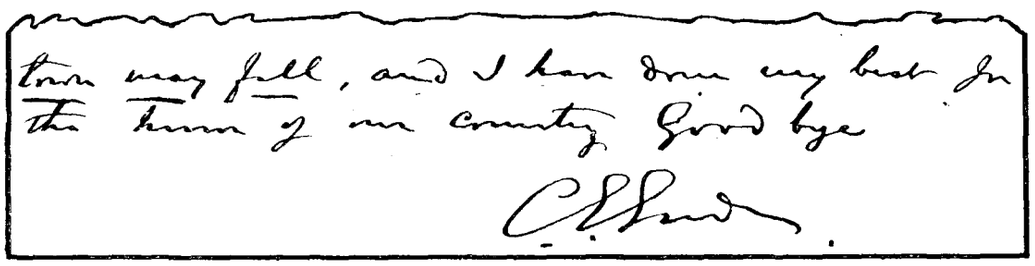

Town may fall, and I have done my best for the honour of our country. Good bye

C. G. Gordon

HIGHLIGHTS OF THE WEEK

FRIDAY, JAN. 25th.

Nat., 7.30, B.B.C. Orchestra (Section D) conducted by Sir Granville Bantock. 8.30, Entertainment Hour.

Reg., 8.15, "Robert Burns" (from Scottish) 9, B.B.C. Chamber Music Concert.

Abroad.

Vienna, 8, Reger Concert by the Mildner Quartet

SATURDAY, JAN. 26th

Nat., 8.30, "Music Hall," with Mrs. Jack Hylton and Her Boys, The New Trix Sisters, Harry Tate, etc. 10, "Gordon at Khartoum."

Reg., 7.30, The Serge Krish Quartet. 8.10, Conversations in the Train. 8.30, Brahms Piano Recital by F. Howard Jones. 9, B.B.C. Orchestra (Section C).

Abroad.

Frankfurt, 7.10, "The Rhine, Mosel and Saar"—a variety programme from Coblenz.

SUNDAY, JAN. 27th

Nat., 2, The Luton Band. 5.30, Kutcher String Quarter. 9, Hastings Municipal Orchestra.

Reg., 4.30, B.B.C. Theatre Orchestra. 5.30, Wireless Military Band. 9.30, Sunday Orchestral Concert.

Abroad.

All Italian Stations, 7.55, Relay of Mascagni's new Opera "Nerone" from the Scala, Milan.

MONDAY, JAN. 28th

Nat., 8, Songs from the Films—VII. 9, "Is that the Law?" 10, International String Quartet.

Reg., 7.15, B.B.C. Dance Band. 8, Famous Trials—V, The Trial of Dame Alice Lisle.

Abroad.

Brussels I, 8.50, Bach Anniversary Concert

TUESDAY, JAN. 29th.

Nat., 8, Famous Trial. 9, Recital for Two Violins (Winifred Small and Jean Pouquet). 10.30, London Symphony Orchestra.

Reg., 7.15, Mr. Flotsam and Mr. Jetsam. 7.30, Glees and Part Songs by the B.B.C. Vocal Octet. 9, B.B.C. Orchestra (Section D).

Abroad.

Strasbourg, 8.30, Opera "Julius Caesar" (Handel).

WEDNESDAY, JAN. 30th.

Nat., 8, The Famous Tragedy of "The Queen of Cornwall." 10, Gershom Parkington Quintet.

Reg., 7, The Air-do-Wells. 8, Village Debate. 8.30, Soft Lights and Sweet Music. 9, B.B.C. Orchestra (Section D).

Abroad.

All German stations, 7.35, "Battle Songs of Young Germany," by the Hitler Youth Organisation.

THURSDAY, JAN. 31st.

Nat., 8, "Love Needs a Waltz." 9, The Wireless Military Band. 10.15, B.B.C. Orchestra (Section D).

Reg., 7.30, Fred Hartley and His Novelty Quintet. 8.15, Royal Philharmonic Concert, Part I, conducted by Sir Thomas Beecham.

Abroad.

Kalundborg, 7.10, Wagner Concert by the Radio Symphony Orchestra, Conductor: Fritz Busch.

COSSOR MODEL 535

Incorporating a Neon Tuning Indicator and Tone Compensated Volume Control

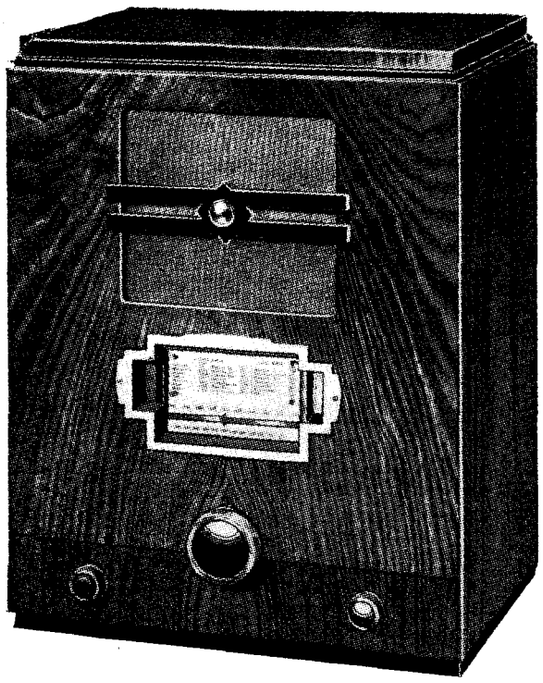

**FEATURES.—*Type.*—*Table-model superheterodyne for AC mains.* *Circuit.*—*Pentagrid frequency changer—screened pentode IF amplifier—double-diode second detector—steep-slope pentode output valve. Full-wave valve rectifier.* *Controls.*—*(1) Tuning, with neon tuning indicator. (2) Volume, with separate indicator on wavelength scale. (3) Waverange and on-off switch. (4) Tone control.* *Price.*—*12 guineas.* *Makers.*—*A. C. Cossor, Ltd., Highbury Grove, London, N.5.*

THE fact that in the past the majority of Cossor receivers have been of the straight HF-det.-LF type makes the introduction of this new superheterodyne an event of more than usual interest.

Although the set falls into the popular class employing four valves (excluding the rectifier), a departure from standard practice has been made in the second detector stage. Instead of the customary double-diode-triode valve, a special double-diode valve is used without the amplifying portion. To compensate for any lack of amplification which might result from this course, a steep-slope pentode is used in the output stage and the performance in the matter of range indicates that this arrangement is thoroughly justified.

The range is, in fact, the feature of the performance which is most likely to impress the listener on his first acquaintance with the set. At least twelve Continental stations were found to be of good programme value in daylight, and the reception from Fécamp and Monte Ceneri was particularly good during the period of the tests.

The pentagrid frequency changer is preceded by a band-pass filter with a combination of capacity and inductance coupling. On long waves the coupling is automatically adjusted to the new conditions by an additional inductance which is brought into operation by the waverange switch. In Central London approximately two channels were lost on either side of the Brookmans Park transmitters, but elsewhere in the medium-wave range adjacent channel selectivity should be possible. On long waves the Deutschlandsender is sufficiently powerful to break through the sideband interference from Droitwich and Radio-Paris, and can definitely be classed as a station of good programme value.

An interesting feature of the connections of the frequency changer stage is the employment of a small HF choke in series with the by-pass condenser in the anode circuit. Similarly, there is an HF choke in the common screen connection between the frequency changer and IF stages. These have been introduced to suppress parasitic oscillations which might give rise to a noisy background. Self-generated whistles due to harmonics of the oscillator are extremely weak. One fairly promi-

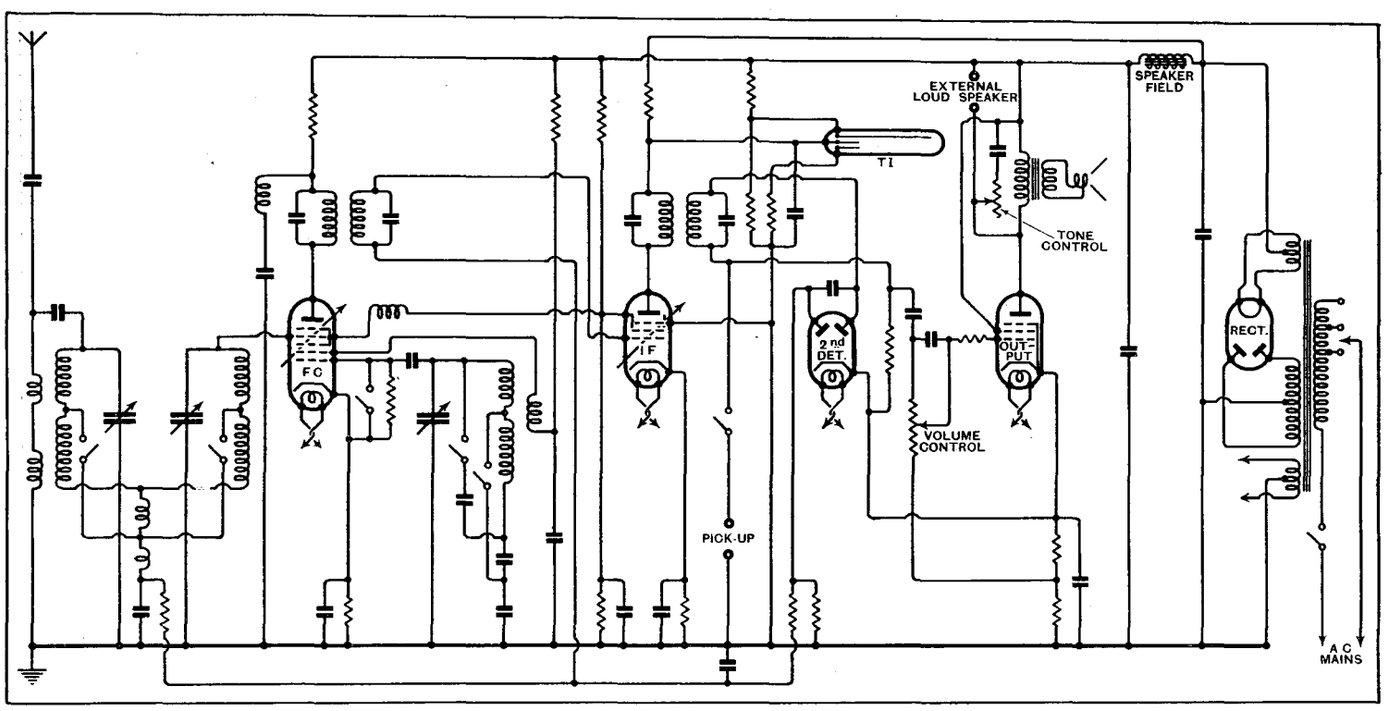

A special double-diode second detector, tone compensated volume control and neon tuning indicator, are interesting features of the circuit.

Cossor Model 535—

nent second-channel whistle was noted on the medium waveband, but apart from this the set had a very clean background.

The double diode detector provides AVC in the usual manner, the delay voltage being derived from the cathode resistance in the output stage. The range of the automatic volume control is adequate, and it performs its functions smoothly, without introducing appreciable sideband distortion when tuning through a station.

The quality of reproduction is characterised by brilliance rather than by a full body of tone. There is, however, a fair balance of bass without the drawback of any obvious bass resonance. The manual volume control is tone compensated to correct for loss of high frequencies due to the shunting effect of the input capacity of the last valve in the high-resistance volume control.

The tuning of the set is simplified by a neon tuning indicator in which the height of the column of light is proportional to the strength of the carrier of the station. The range of control has been well chosen, and while adequate indication is provided on weak stations the discharge reaches the top of the tube only for a very strong local signal. The manual volume control is also coupled mechanically to a pointer working over a vertical scale on the right of the tuning scale. A large-diameter tuning knob is provided and a detachable tablet carries the names and wavelengths of the principal European broadcasting stations. Although the tuning scale is calibrated at intervals of 50 metres or so the intermediate sub-divisions are indefinite, and there does not seem much point in giving the wavelengths of stations to four significant figures, as is the case.

The mechanical design and construction of the chassis calls for special mention, and it is interesting to note that the power rectifier valve is mounted on a bracket immediately above the mains transformer, which appears to be its logical position. In addition to the tone compensation associated with the volume control there is a separate manual tone control which is operated by a knob in the centre of the loud speaker fret.

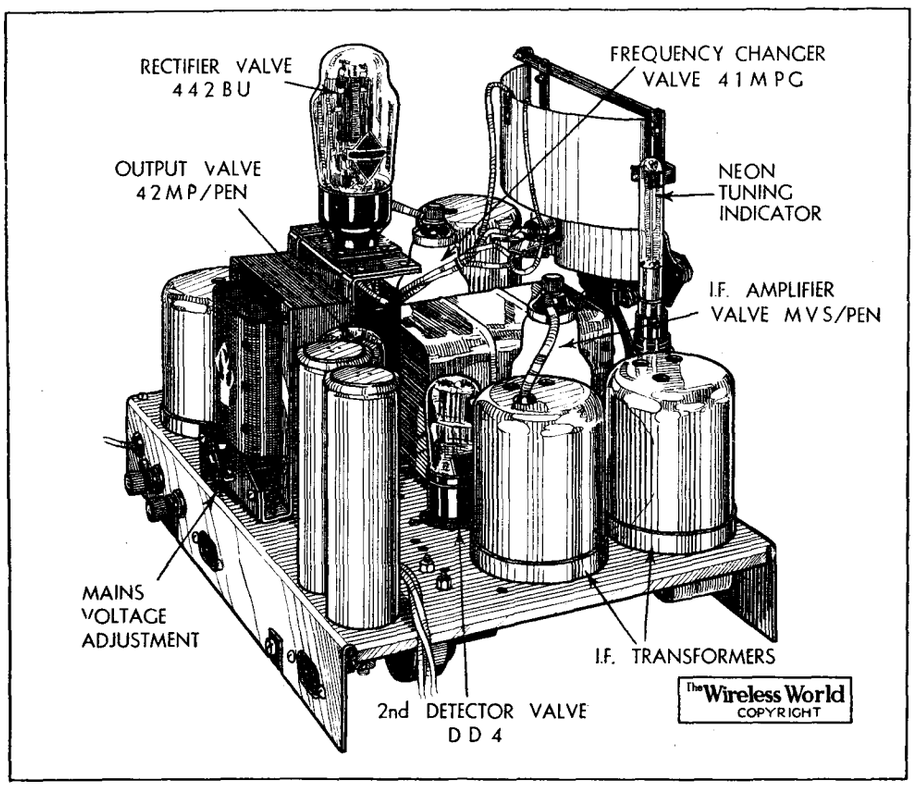

The power rectifier valve is mounted in its logical position in association with the mains transformer.

The Cold Cathode Tube

Electron Multiplier for Very Weak Currents

THE cold cathode valve has been the dream of scientists for years. Various attempts have been made to produce such a valve which would not only rectify, but amplify satisfactorily.

An ideal cold valve should be one in which an electron emission is obtained from the cathode without the necessity of heating the cathode either directly or indirectly to secure the emission of electrons; at the same time it should be capable of amplifying minute currents as well as doing duty as a good rectifier.

Recently a new type of cold cathode valve has been developed by P. T. Farnsworth, of America. It is a cold cathode vacuum tube capable of amplifying and being particularly adapted for use in television reception.

Unlike the conventional triode valve it possesses two cathodes mounted concentrically around the anode, which is formed by a metal ring. Focusing of the electron stream is facilitated by making the cathodes curved. The anode is maintained at a positive potential with respect to the cathode by several hundred volts.

In order to prevent the electrons from striking the anode the valve is placed in an electromagnetic field, which produces another disturbance and prevents the electrons from meeting the anode.

An electron leaving the cathode, therefore, would be attracted towards the anode, and by means of the action of the electromagnetic field further energy is imparted to it, and passing through it strikes the other cathode. In striking the second cathode secondary emission is produced, and the multiplied electrons would then return to the original cathode to be again multiplied by further secondary emission. As this process is repeated a large current would be built up.

It has been found that currents of a fraction of a microampere per lumen can be obtained from a pure nickel plate which has not been coated to increase its photo-emissive properties.

An examination of the circuit details below will show how this is achieved. A tuned circuit is connected between the two cathodes, and injected into it is a radio-frequency voltage of from 25 to 90 volts, and of a frequency of about 50 megacycles. This additional energy is sufficient to cause secondary emission to take place.

With some of the valves produced it was discovered that the electron stream would not build up without the additional force, whilst with others it has been found that the valves would oscillate without the application of the radio-frequency voltage. In other instances it was noticed that oscillation only occurred after the application of the radio-frequency voltage.

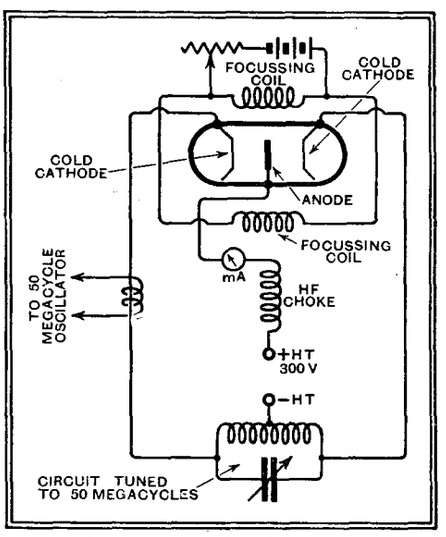

Circuit details of cold cathode valve and associated components.

The result of the building-up of this secondary emission is that the current in the tuned circuit will increase. By varying the anode voltage as well as the existing voltage the current can be controlled.

It is in the application to television that this valve will be found of greatest utility.

FOUNDATIONS OF WIRELESS

Part IX.— More About Tuned Circuits

DEALING mainly with the behaviour of parallel tuned circuits as used in practical wireless reception, and with the calculation and measurement of the "goodness" of such circuits

(Continued from page 48 of January 11th issue)

By A. L. M. SOWERBY, M.Sc,

THE series tuned circuit, with which we made acquaintance last week, derives its name from the fact that the voltage driving the current is in series with both coil and condenser, as in Fig. 43 *a*. In its very similar counterpart, the parallel tuned circuit, the voltage is considered to be applied in parallel with both coil and condenser, as in Fig. 43 *b*. The change in circuit from one to the other results in a kind of interchange in the functions of current and voltage.

In *a*, the current is necessarily the same at all parts of the circuit; we elucidated its behaviour by considering the voltages that this current would produce across the various components and added them up to find E, the driving voltage. In *b*, the position is reversed; here we have the same voltage applied to both the inductive and the capacitative branches, and we have to find the separate currents in the two and add them to find the total current.

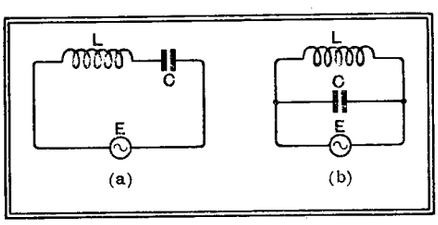

Fig. 43.—Series and parallel tuned circuits compared. In the series circuit (a), the current through L and C is the same; in (b) the voltage across L and C is the same

In the absence of resistance, the current in the L-branch will be determined by the reactance $2\pi fL$ of the coil; it will be $E/2\pi fL$. In the C-branch, it will similarly be $E/(1/2\pi fC) = E.2\pi fC$. We know already that these two currents will be exactly out of phase with one another, as were the voltages in Fig. 35. The net current taken from the generator will, therefore, be the simple difference of the two individual currents. If at some particular frequency the current through L is the larger, the resultant current will be $E(1/2\pi fL - 2\pi fC)$. By slowly increasing the frequency, the current through the inductance can be made smaller and that through the condenser simultaneously made larger, so that the difference between the two, which is the net current, becomes smaller and smaller. Eventually the individual currents will be equal, at which frequency the net current will have reduced to vanishing point. Further increase in frequency will make the capacitative current the larger, so that the resultant current will rise again from zero, but with its phase reversed.

The frequency for which the current totally vanishes is the frequency of resonance. As for the series circuit, this frequency is reached when $2\pi fL = 1/2\pi fC$, so that $f = 1/2\pi\sqrt{LC}$. The resonance frequency of a tuned circuit is thus the same no matter whether the coil and condenser are arranged in series or in parallel with the source of voltage that drives the current.

In the series circuit, the current flowing produced across L and C two equal voltages, which, although they might individually be quite large, cancelled one another out. Taken together, L and C gave a part of a circuit across which no voltage was developed however large the current flowing; their joint impedance, therefore, was zero. Conditions are similar in the parallel resonant circuit. Here the voltage E produces through L and C two equal currents, which, although they may individually be quite large, cancel one another out. Taken together, L and C give a circuit through no current flows however large the voltage applied; their joint impedance, therefore, is infinitely large.

The parallel circuit thus acts as a perfect barrier to the passage of currents of the frequency to which it is tuned; it is therefore often known as a "rejector" circuit.

Practical Effects of Resistance

But it will be clear that two conditions are necessary for this rejector action to be perfect. Firstly, the currents through the two branches must be equal, which can only happen when $X_L = X_C$; in other words, at the exact frequency of resonance. At other frequencies, as we have already seen, there will be more current through one branch than through the other.

The second condition for complete cancellation of the two currents is that they shall be out of phase by exactly 180 degrees. We have already seen that in a circuit containing a pure capacity or inductance the current is 90 degrees ahead of, or behind, the voltage, but that in a purely resistive circuit the current is in phase with the voltage. In a mixed circuit, containing both L and *r* or C and *r* the phase of the current, as might be expected, lies between those appropriate to the individual circuit-elements in the way summarised in Fig. 44, and shown for one particular case in the curves of Fig. 30. It follows that if resistance is present in either the inductive or the capacitative branch of a parallel-tuned circuit, as in Fig. 45 *a*, the two currents are less than 180 degrees out of phase, and so can never exactly cancel one another. Even at resonance, therefore, there is a small residual current, with the result that the tuned circuit no longer presents a *complete* barrier to the passage of currents of the frequency to which it is tuned. Further, it will be clear that the larger the resistance *r* of Fig. 45 *a*, the more the phase of the current passing through that branch of the circuit will depart from that proper to a purely inductive circuit, and so the larger will be the uncancelled residue of the capacitative current. Put briefly, a larger *r* leads to a larger current through the circuit as a whole, and hence to a decrease in the total impedance of the circuit.

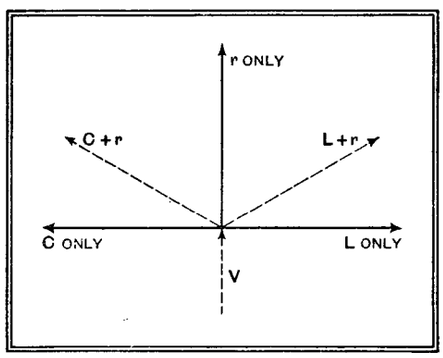

Fig. 44.—Illustrating phase relationships of currents in different types of circuit: *r* gives current in phase with voltage V, while C and L give currents out of phase by 90° in different directions. Combinations of C and *r* or L and *r* give intermediate phases.

It can be shown that the small current that passes through *a* at resonance is, for all practical purposes, exactly in phase with the driving voltage E. It is therefore permissible to replace the whole of that circuit by a pure resistance R, as in

Foundations of Wireless—

Fig. 45 *b*, it being strictly understood that this simplification is only allowable as long as we restrict ourselves to considering the behaviour of the circuit towards currents of the exact frequency to which it is tuned.

This resistance R has queer properties; as we have seen it is infinitely large when *r*, the true resistance of the circuit, is zero, but decreases as *r* is increased. Since real, physical resistances do not behave in this topsy-turvy way, we have to distinguish R from an ordinary resistance by coining a special name for it; it is generally referred to as the *dynamic resistance* of the tuned circuit. Its *exact* value is a little troublesome to calculate; for all practical purposes in connection with the kind of tuned circuits used in wireless work an approximation of more than sufficient accuracy is given by the relation $R = L/Cr$. Thus a tuned circuit consisting of an inductance of 160 μH., tuned with a capacity of 200 $\mu\mu$F., and with a high-frequency resistance *r* of 7 ohms has a dynamic resistance $R = (160 \times 10^{-6})/(200 \times 10^{-12} \times 7) = (160 \times 10^{6})/1{,}400 = 114{,}000$ ohms. It is evident that if *r* had been $3\frac{1}{2}$ or 14 ohms R would have come out at 228,000 or 57,000 ohms, respectively, so that halving or doubling the resistance *r* doubles or halves the dynamic resistance.

Characteristics of Tuned Circuits

The relation between *r* and R is such that the specification of either, in conjunction with the values of L and C, completely determines the circuit.

A parallel circuit has a resonance curve in all respects similar to that of the series circuit already discussed, the sharpness of tuning being determined, as before, by the magnification, $2\pi fL/r$. If R only is know, *r* can be found from the relation $r = L/CR$. Low values of parallel, or high values of series resistance *damp* the circuit, resulting in flat tuning.

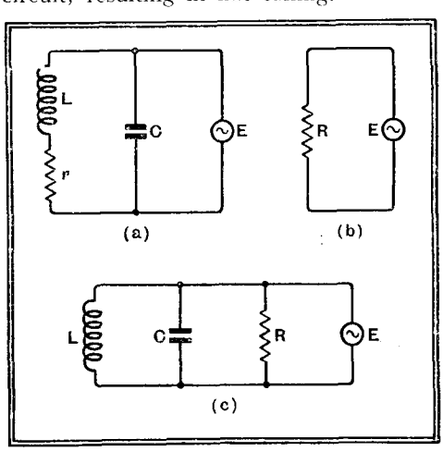

Fig. 45.—Parallel tuned circuit with resistance. Diagrams (b) and (c) show simple circuits equivalent to (a) at resonance only. The condition of equivalence is that $R = L/Cr$.

In the sense that it cannot be measured by ordinary direct-current methods—by finding what current passes through it on connecting across it a 2-volt cell, for example—it is fair to describe R as a fictitious resistance. Yet it can quite readily be measured by such means as those outlined in Fig. 46, using for the measurement currents of the frequency to which the circuit is tuned.

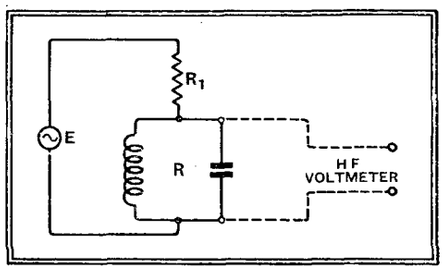

Fig. 46.—Simple method of determining dynamic resistance R for a parallel tuned circuit. If R1 is adjusted until the HF voltmeter reads E/2 volts, we know that R1 = R.

In spite of the inevitability of resistance in the windings of a coil, *r* is fictitious to just the same extent as R, for a true value of *r* cannot be obtained by any direct-current method. Indeed, it may often happen that a change in a coil that will reduce the resistance to direct current—by rewinding it with a thicker wire, for example—has the effect of increasing the high-frequency resistance instead of diminishing it. A true value for *r* can only be found by making the measurement at high frequency, using some such method as that outlined in Fig. 47.

It is possible to calculate the resistance offered to high-frequency currents by the wire with which a coil is wound. This value is always considerably higher than the plain resistance of the wire to ordinary direct current. From our present point of view the reasons for this particular discrepancy are not of much importance; we shall visualise them well enough by remembering that each turn of the coil lies in the magnetic field of the other turns, which has the result that there are set up stray currents in opposition to the main current, thereby impeding its passage. Even in a straight wire the resistance at high frequency is greater than for steady currents, the magnetic field setting up the stray currents responsible for this being derived from the main current in the wire itself.

By making a measurement of the high-frequency resistance of a tuned circuit on the lines indicated in Fig. 47 we always find a value for *r* which is very appreciably higher than that found by calculation. This indicates that there are sources of resistance other than the wire with which the coil is wound. Investigation shows that this additional resistance, which may even be greater than that of the coil, is due to imperfections in the dielectric materials associated with the tuned circuit.

The plates of the tuning condenser, for example, have to be supported in some way; even if the dielectric between the plates is mainly air there is some capacity between neighbouring portions of the two sets of plates for which the insulating support provides the dielectric. Valveholders, valve-bases, or terminal blocks, connected across the tuned circuit also introduce capacity, the dielectric again being the insulating material on which the metal parts are mounted.

All these dielectrics are imperfect in the sense that they are not "perfect springs." In other words, in the rapid to-and-fro movement of electrons set up in them by the high-frequency voltage across the tuned circuit a certain amount of energy is absorbed and dissipated as heat. We have seen that the absorption of energy is an inseparable characteristic of resistance; a circuit containing such sources of energy-loss as these is therefore found to have a high-frequency resistance *r* higher than that calculated for the coil and other metallic paths alone. The total is referred to as the "equivalent series resistance" of the circuit, the value of *r* so described being that which in conjunction with a perfectly loss-free capacity and a resistance-less coil would give a tuned circuit identical with the actual one at the frequency for which the measurements of resistance were made.

Effect of Dielectric Losses

Physically, these dielectric losses behave as though they were a resistance in parallel with the circuit, as in Fig. 45 *c*, but they may be expressed as equivalent series

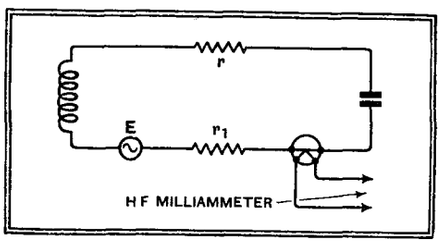

Fig. 47. Simple method of determining series resistance *r*. If the current is noted when *r*1 = 0, and then reduced to half this value by introducing and adjusting *r*1, the necessary value of *r*1 is *r*. The resistance of the HF milliammeter (thermo-junction) is included in *r*, and must be allowed for.

ohms by the usual conversion. For example, suppose that a particular valve holder is equivalent to 0.45 MΩ parallel resistance at 250 metres. If $L = 100\mu$H., then $C = 176$ $\mu\mu$F., and the value of *r* added to the circuit by connecting the valve-holder across it is $100/(176 \times 0.45) = 1.26\Omega$. But if the inductance of the coil were 200 μH., the added series resistance equivalent to the valve-holder would be 5.04Ω, four times the preceding value. (L doubled implies also C halved.) As the true series resistance of the 200 μH. coil (i.e., the resistance actually due to the winding itself) will be approximately double that of the 100 μH. coil at the same frequency, it follows that the damping effect due to the valve-holder will be twice as great when the larger coil is in use.

A true series loss, such as a high-resistance connection in a switch or at a soldered joint, will add the same series resistance

Foundations of Wireless—

irrespective of the inductance of the coil. The lower the inductance of the coil, and hence the lower its resistance, the greater will be the damping effect of the added resistance. The distinction is important; a fixed series resistance damps a small coil more than a large one, whereas a fixed parallel resistance has a greater effect on a large coil.

The resistance of a coil, or of a tuned circuit, depends very largely upon the frequency. With the ordinary small coil of some 160 μH., the equivalent series resistance may vary from some 25 ohms at 200 metres to perhaps 4 or 5 ohms at 550 metres. With decrease of frequency r drops, but C, the capacity necessary to tune the coil to the required frequency, rises, with the result that the dynamic resistance does not vary so greatly as the figures for r would suggest. In practice, the values for R vary over a range of about two to one over the medium-wave band. The high values for series resistance at low wavelengths are in the main due to dielectric losses, which, expressed as parallel resistance, are inversely proportional to frequency. A valve-holder that introduces $1\frac{1}{2}$ MΩ parallel resistance at 500 Kc. will introduce $\frac{1}{2}$ MΩ at 1,500 Kc.

In conclusion, we see that the true representation of a tuned circuit as actually existing in a wireless set should include both series and parallel resistance, making a combination of Figs. 45 *a* and *c*. But owing to the relationship existing between them a circuit can be completely described at any one frequency by omitting either and making such an adjustment to the value of the other that it expresses the total loss of the circuit as a whole.

(*To be continued.*)

Letters to the Editor

The Editor does not hold himself responsible for the opinions of his correspondents

Developing the Battery Receiver

I HAVE been spending just a little time in wondering why Mr. Thomson and Mr. Cocking in the correspondence columns of your issue of January 11th should be worrying themselves unnecessarily over the reproduction of the notes of lower frequency.

Most certainly, as Mr. Cocking suggests, a large output is necessary and various other additions which the modern house could not accommodate when a battery receiver is required to reproduce these very low frequencies.

Some short time ago experiments were conducted at the National Physical Laboratory and it was shown that when the sound wave produced by the human voice was split up so that the fundamental and harmonics were present and voice had tone, pure and definite audibility occurred. If the higher frequencies were present and the lower frequencies were filtered away the voice could be heard and the words understood. However, when the lower frequencies were left and the higher frequencies filtered away the voice was not only unrecognisable but unintelligible. Messrs. Siemens conducted research work in the direction of extending the frequency of the transmitter used with the ordinary telephone and the introduction of these higher frequencies very decidedly improved long-distance transmission.

The lower frequencies are certainly not as valuable as the higher frequencies in changing the wireless set from a novelty to a sound musical instrument; the present trend of modern design is proving this, and for the last five years or more I have admired the pioneer work done so ably by *The Wireless World* in this direction.

Everyone interested in this particular development appreciates that the higher frequencies impart the fullness and richness called tone. In the intelligence of speech and the naturalness and brilliance of music the higher frequencies are always the predominating frequencies present. Listening to electrical reproduction of sound where the so-called round tone is present is very apt to make one rather tired and places a strain upon one's nervous system. The mind is possibly striving to correct for the missing higher frequencies with the consequent strain upon the nerves, and we often shut off the receiver or reproducer feeling tired.

Music with the higher frequencies present is very easy to listen to, it stimulates the nervous system.

I should like Mr. Cocking and Mr. Thomson to reproach each other over more elevating frequencies in the future and to keep away from baser ones.

Lancaster. HERBERT LEACH.

I QUITE agree with Mr. W. T. Cocking's statement that it requires more than 1 watt to produce a pure 50 c/s output; more so when the efficiency of the average permanent magnet type is only about 3 per cent. from electrical input to sound output. Even a speaker of ten times the efficiency which is available for PA and talkie apparatus requires 5 watts minimum, with a correctly designed horn or baffle free from resonances. To sum up we require sound radiation in comparison to wattage output, which is a very long way off at present.

Bacup. JOSEPH CRAWSHAW.

Broadcasting's Most Urgent Need

PERMIT me to say that on reading your editorial comment of January 4th I entirely disagree with the conclusion reached that no progress can be made in the design and manufacture of receivers unless changes are made in the system of broadcast transmission. I submit there is still room for a definite improvement to be made in receivers to enable them to give a more faithful reproduction of the present frequency band.

The average receiver even now has a so-called tone control which in effect curtails the higher frequency response, and this is not used entirely because of interference from transmitters occupying an adjacent frequency band. The proximity of electrical apparatus is more frequently the cause of interference on the upper register.

When I think of the amount of distortion that emanates from the average receiver, due to faulty components and bad design, I think a much better occupation could be found for manufacturers and designers than "marking time." The average receiver still leaves much to be desired, and they could with profit use some of the knowledge you say they have available to turn out more reliable and better receivers to meet the conditions as they are.

The suggested solution of the greater frequency problem by giving each country a definite band of frequencies for its own use, subject to its own jurisdiction, is no solution at all. The radiated wave has no respect whatever for abstract geographical lines representing a country's boundaries, and would cross these to cause worse chaos than has yet been experienced.

Broadcasting is inherently international, and the satisfactory distribution of power and frequency must wait for international agreement. JAMES W. GRAHAM.

Perth.

MR. WICKHAM, in his letter published last week, in attempting to defend the existing condition of wavelength distribution, begins by reading into your leader of January 4th something which is not there.

You point out that "Really good production, to be satisfying, should cover a range of about 30-13,000 cycles." Mr. Wickham says, "To transmit up to 13,000 cycles, as suggested by you." There is no suggestion in your leader that this range of 30-13,000 cycles should be transmitted; this would be the ideal which we cannot hope to achieve yet, perhaps never.

Few readers will be in sympathy with Mr. Wickham's defence of "existing conditions," and it is perfectly true that "designers and manufacturers of broadcast receivers are marking time," as you say, waiting for new conditions of transmission before they improve reproduction.

London, N.2. DESIGNER.

Standard Frequency Transmissions

WITH reference to your remarks concerning the transmission of standard audio frequencies, it may interest you to know that a transmission of this nature was being radiated on a wavelength of 1,500 metres at 1.45 a.m. on Thursday, January 10th; it would appear, therefore, that the B.B.C. have commenced experimenting in this direction. J. F. ELPHICK.

Winchester.

What Happens to Old Gear ?

I SHOULD like to ask a question that I am sure will interest some of your old-time readers. What have they done with their early apparatus? Do they still keep it waiting for some wonderful occasion when it *may* be wanted, or have they been brave and buried it in the garden, or have they found some South Sea island which still uses the stuff? I refer to old variable inductances, honey-comb coils, elderly transformers, beautiful stud switches, .001 variable condensers and the canned coils of yester-year. I have seven pairs of Brown 'phones which cost as much as a radio-gramophone nowadays, an immensely complicated crystal receiver costing £16, and a Primax speaker that denuded me of £7. Its armature was a simple bar across a magnet. Are they to be interred with tears and soft music, or what? Would the Editor like some of them on his desk?

H. E. ADSHEAD.

Beslyns, Gt. Bardfield,
Braintree.

Broadcast Brevities

By Our Special Correspondent

A Site for North Eastern

SPADES are now busily preparing the foundations of the new North Scottish station at Burghead. With this station in hand the B.B.C. engineers can now concentrate on the search for a suitable site for North Eastern.

Several sites in Durham have been tested, but no decision has been made, though I hear that the authorities favour a spot twelve to fifteen miles outside Newcastle on the Carlisle road.

Synchronising the Little Nationals

Thus a few more nails are being knocked in the coffin of the little Nationals, whose wavelengths will be required by North Scottish and North Eastern. They are talking at Broadcasting House of attempting to synchronise all the medium-wave Nationals after the manner of London and West National. With modern frequency-controlling devices this should not be an insuperable problem.

B.B.C. and Television

THE imminence of the publication of the Television Report has not disturbed the *sang froid* of the officials at Portland Place. Their detachment in the matter is, of course, due to the fact that the B.B.C.'s part is not to reason why, but to endeavour to carry out the demands of His Majesty's Minister.

These will in all probability involve high definition ultra-short-wave tests, which the Corporation is in a position to carry out almost at once.

No Preferences

On the roof of Broadcasting House is the ultra-short-wave transmitter, and just below it is accommodation for installing any, or all, of the systems of television recommended by the Committee.

Film Tests Soon ?

Experimental programmes may be given in the television studio in Portland Place, where Mr. Eustace Robb continues bravely with the 30-line transmissions, but it is more likely that the high definition tests will employ film, which, *pace* the artists, is a much more manageable commodity under the glare of the scanning devices.

A Scanning Point

Incidentally, however, high definition scanning will be less objectionable to artists than the present low definition scanning at twelve frames a second, which induces the feeling that one's eyelids are afflicted with St. Vitus' Dance.

More Like "Offenbach"

ONE of the happiest B.B.C. programmes for some time was the *pot pourri*, "The Life of Offenbach," which was produced by Dr. Julius Burger, the Viennese producer of music.

I hear that the B.B.C. has commissioned three more similar features, the first to be called "City of Song," and consisting of Viennese light music covering the period from Mozart to Lehár. The second will be called "Liebestraume," and will feature Viennese love music. The third promises to be the most exciting, for it is described as "Round the World in Sixty Minutes." It will be a medley of music of all nations.

Scottish Talks

THE so-called dour and taciturn Scot is more a legend than a fact. All Scotsmen I know have plenty to say, and I am not surprised to learn that a new talks studio is being added to the Edinburgh headquarters.

Scotland now originates many more broadcasts than formerly, and runs her own broadcasts for schools.

The Saar Broadcast

IT is rare for the B.B.C. not to handle its own outside broadcasts, but an exception occurred in the case of the broadcasts from the Saar. I hear that the microphone and broadcast amplifier for the relay of the proceedings in Saarbrücken were installed and operated for the Columbia Broadcasting System of America, and for the B.B.C. by Standard Telephones and Cables, Ltd.

Trunk Line Tests

Engineers of the company went to the Saar at short notice two days before the relay was due to take place in order that exhaustive tests might be made in co-operation with the British Post Office on the trunk lines from the Saar to London.

ICE HOCKEY BROADCASTS figure frequently in the Swiss programmes. Here is the captain of a women's hockey team at Davos describing a match at the Beromunster microphone.

Watery Interval Signals

"WATER, water everywhere!" expresses the B.B.C. reaction to the flood of suggestions for station interval signals. Nearly every region has proposed sounds connected with water. The West suggests the noise of waves breaking on the coast line; Midland wants the soft murmuring of the River Dove.

Jobs for Service Men

Such watery signals would probably benefit the wireless trade. The sound of rushing waters is the prelude to perhaps 50 per cent. of all set troubles, and it is more than likely that the burbling of the Dove might be mistaken by the listener for a hissing valve or an expiring transformer. Investigation would follow and, as so often happens, a little tinkering would soon produce a profitable job for the nearest service man.

Choosing the Right One

A B.B.C. committee meeting to discuss interval signals will be held next month at Broadcasting House, and I am assured that all suggestions made will be carefully considered.

As these number at least a hundred, the Committee has its work cut out to choose the necessary five.

How Announcers Differ

THE B.B.C., never having succeeded in subduing the individuality of announcers, appears to have given up the attempt. Certain announcers are now recognised as having personalities which harmonise with particular types of programme. The same voice now introduces symphony concerts and recitals, and another voice the variety and other light programmes.

This must not be taken as an indication that announcers will soon unbend and become "chatty" in the American manner.

Petersen v. Neusel

BOXING fans will be pleased to hear that on February 4th a running commentary by Lionel Seccombe will be given on the Petersen *v.* Neusel fight, which is being staged at the Empire Pool and Sports Arena, Wembley. The fight will come on at approximately 9.35 p.m.

12,000 Pinheads

From his box the commentator can see 12,000 or more people whose pink faces beneath the lights look like an enormous pool of pinheads, and yet such is the amount of tobacco smoke that these thousands of faces eventually merge into a background of blue leaving no horizon. On February 4th listeners will hear the commentator attempting to paint in the background.

The 200-Volt Microphone

EXPLAINING why Dare Lea, the dance band leader, had to go to Spain to recuperate, a London paper states that "he got hold of a 'live' microphone and 200 volts shot through him."

High voltages are not common in microphones, but I understand that the new type has been specially evolved by the B.B.C. Research Department to stop crooners from breathing on the mike.

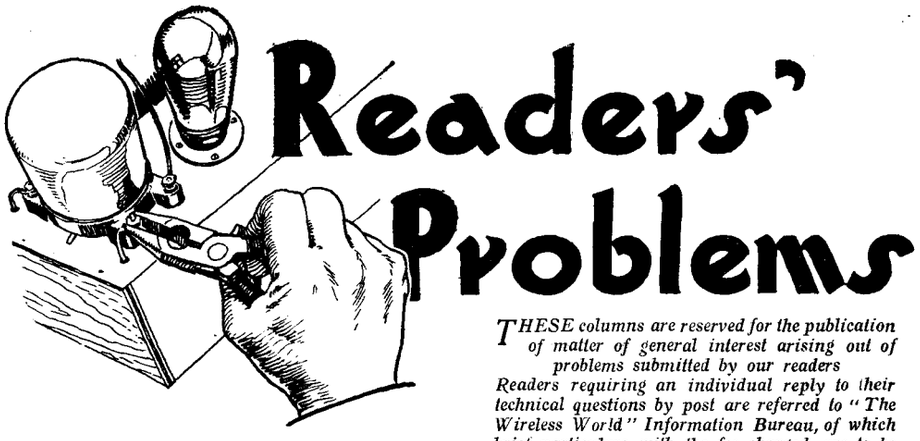

THESE columns are reserved for the publication of matter of general interest arising out of problems submitted by our readers
Readers requiring an individual reply to their technical questions by post are referred to "The Wireless World" Information Bureau, of which brief particulars, with the fee charged, are to be found at the foot of this page.

Screening Affects Tuning Range

A READER who has built an HF amplifying unit for connection to an existing receiver finds that stability can only be obtained by the use of a screened lead between the anode of the HF valve and its "tuned-anode" coupling coil. As these components are mounted some distance apart, the lead is of necessity an exceptionally long one, and we are not surprised to hear that the band of wavelengths covered by the set is appreciably narrower than it was before the HF stage was added. Our correspondent is at a loss to understand how the use of a screened lead can affect tuning.

Fig. 1 (a) has accordingly been prepared to explain this point; referring to this diagram it will be obvious that the capacity existing between the connecting wire and its earthed metallic covering may be represented by the condenser shown in dotted lines, and it is equally clear that this stray capacity is in parallel with the variable tuning condenser; in effect, it acts as an artificial addition to its minimum capacity.

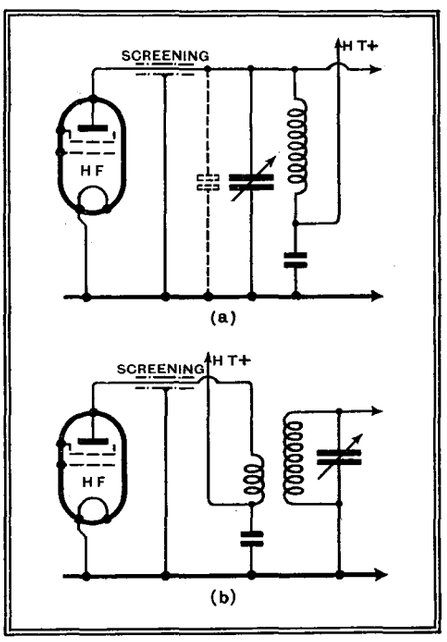

Fig. 1.—The self-capacity of a screened lead is in parallel with the associated tuning condenser. Transformer coupling (diagram (b)) reduces the value of transferred capacity.

Assuming that the screened lead cannot be shortened, the best way of mitigating the harmful effects of the extra capacity is to employ a step-up transformer as in diagram 1 (b) in place of the original tuned anode coupling. Capacity will then be transferred to the tuned coupling circuit as the square of the step-up ratio of the transformer; assuming a 1:2 ratio, the transferred capacity will amount to only a quarter of the present value.

Loud Speaker Clicks

A QUERIST who has just modified his battery-fed receiver by fitting a QPP output stage has noticed that the "click" in the loud speaker, resulting from an interruption of the HT supply to the output valve, is not nearly so loud as formerly.

In the first place, the value of anode current with a "quiescent" system such as that at present in use is bound to be much less than with a conventional output stage, and it therefore follows that the impulse resulting from an interruption will be more feeble.

More important still, the currents flowing through the tapped primary of the output transformer tend to balance themselves out so far as the effects on the secondary are concerned. In a perfectly symmetrical push-pull circuit there would be no click at all.

Why Coils are Screened

THE user of a det.-LF set with a single tuned circuit enquires whether any benefit is likely to be gained by replacing the present coil by one of the screened type.

Screening does not in itself confer any benefit; on the contrary, it rather tends to reduce the "goodness" of a coil. We use it only when it is necessary to prevent interaction between the various coils in a multi-circuit receiver. When there is only one coil interaction troubles are clearly impossible, and so screening is unnecessary, if not actually undesirable.

Less Emission, More Volts

IN describing the behavour of his receiver, a correspondent makes the statement that "the valve cannot be suffering from loss of emission, as the voltage on the anode is actually higher than formerly."

This statement suggests a misunderstanding. When the emission of a valve has declined there is bound to be a rise in voltage on the anode, assuming other factors to remain unchanged. The extent of this rise will be dependent on the value of external resistance in the anode circuit.

This matter will be made clear by considering Fig. 2. Diagram (a) is intended to represent initial operating conditions, and it is assumed that the valve V is operated in such a way that it acts as an effective resistance of 25,000 ohms. In these circumstances the distribution of voltage will be as shown; of the total 120 volts applied, 80 volts will be dissipated across the anode resistance and the remaining 40 volts will appear between anode and cathode.

Loss of emission is always accompanied by a rise of apparent resistance, and in diagram (b) it is assumed that the effective resistance of the valve has doubled itself to 50,000 ohms. It is easy to show, by applying Ohm's Law, that under the new conditions the anode-cathode voltage will increase from 40 volts to 60 volts. Of course, the full increase will not be indicated by an ordinary type of meter, which will always tend to mask changes in actual anode voltage; it therefore follows that, in the case of

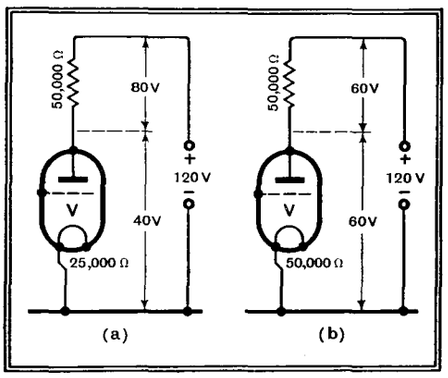

Fig. 2.—Illustrating the rise of anode voltage which accompanies a decline in valve emission (with consequent increase in valve resistance).

a valve with a high resistance in its anode circuit, even a small rise in measured anode voltage must be taken as a probable indication that the valve is ageing.

Converting Battery Sets

IT is asked whether a battery receiver can be successfully modified for mains operation by fitting indirectly-heated valves, and if so, what effect the alteration will have on sensitivity and selectivity.

Battery valves are inherently less efficient than their mains-operated counterparts, and, as a result, an attempt to convert a set in this way is likely to cause instability. There is no basic reason, however, why this difficulty should not be overcome by improved screening, reduced coupling in intervalve circuits, and by extra decoupling.

The converted set is likely to be more sensitive, and its true selectivity should be virtually unchanged. There may, however, be a decrease in apparent selectivity.

The Wireless World
INFORMATION BUREAU

THE service is intended primarily for readers meeting with difficulties in connection with receivers described in *The Wireless World*, or those of commercial design which from time to time are reviewed in the pages of *The Wireless World*. Every endeavour will be made to deal with queries on all wireless matters, provided that they are of such a nature that they can be dealt with satisfactorily in a letter.

Communications should be by letter to *The Wireless World* Information Bureau, Dorset House, Stamford Street, London, S.E.1, and must be accompanied by a remittance of 5s. to cover the cost of the service.

Personal interviews are not given by the technical staff, nor can technical enquiries be dealt with by telephone.

PRINCIPAL BROADCASTING STATIONS OF EUROPE

Arranged in Order of Frequency and Wavelength

(Stations with an aerial power of 50 kW. and above in heavy type)

Station.	kc/s.	Tuning Positions.	Metres.	kW.
Kaunas (Lithuania)	155		1935	7
Brazov (Romania)	160		1875	20
Huizen (Holland). (*Until* 3.40 *p.m.*)	160		1875	7
Kootwijk (Holland) (*Announced Huizen*). (3.40 *p.m. onwards*)	160		1875	50
Lahti (Finland)	166		1807	40
Moscow, No. 1, RW1 (Komintern) (U.S.S.R.)	174		1724	500
Paris (Radio Paris) (France)	182		1648	75
Istanbul (Turkey)	187.5		1600	5
Berlin (Deutschlandsender Zeesen) (Germany) (*S.-w. Stns.*, 16.89, 19.73, 25.51, 31.38 *and* 49.83 *m.*)	191		1571	60
Droitwich	200		1500	150
Minsk, RW10 (U.S.S.R.)	208		1442	35
Reykjavik (Iceland)	208		1442	16
Paris (Eiffel Tower) (France)	215		1395	13
Motala (Sweden). (*Relays Stockholm*)	216		1389	30
Novosibirsk, RW76 (U.S.S.R.)	217·5		1379	100
Warsaw, No. 1 (Raszyn) (Poland)	224		1339	120
Ankara (Turkey)	230		1304	7
Luxembourg	230		1304	150
Kharkov, RW20 (U.S.S.R.)	232		1293	20
Kalundborg (Denmark) (*S.-w. Stn.*, 49.5 *m.*)	238		1261	60
Leningrad, RW53 (Kolpino) (U.S.S.R.)	245		1224	100
Tashkent, RW11 (U.S.S.R.)	256.4		1170	25
Oslo (Norway)	260		1154	60
Moscow, No. 2, RW49 (Shchelkovo) (U.S.S.R.)	271		1107	100
Tiflis, RW7 (U.S.S.R.)	280		1071.4	35
Rostov-on-Don, RW12 (U.S.S.R.)	355		845	20
Sverdlovsk, RW5 (U.S.S.R.)	375		800	50
Geneva (Switzerland). (*Relays Sottens*)	401		748	1.3
Moscow, No. 3 (RCZ) (U.S.S.R.)	401		748	100
Voroneje, RW25 (U.S.S.R.)	413.5		726	10
Oulu (Finland)	431		696	2
Ufa, RW22 (U.S.S.R.)	436		688	10
Hamar (Norway) (*Relays Oslo*)	519		578	0.7
Innsbruck (Austria). (*Relays Vienna*)	519		578	0.5
Ljubljana (Yugoslavia)	527		569.3	5
Viipuri (Finland)	527		569.3	13
Bolzano (Italy)	536		559.7	1
Wilno (Poland)	536		559.7	16
Budapest, No. 1 (Hungary)	546		549.5	120
Beromünster (Switzerland)	556		539.6	100
Athlone (Irish Free State)	565		531	60
Palermo (Italy)	565		531	4
Stuttgart (Mühlacker) (Germany)	574		522.6	100
Grenoble, P.T.T. (France)	583		514.6	15
Riga (Latvia)	583		514.6	15
Vienna (Bisamberg) (Austria)	592		506.8	120
Rabat (Radio Maroc) (Morocco)	601		499.2	6.5
Sundsvall (Sweden). (*Relays Stockholm*)	601		499.2	10
Florence (Italy). (*Relays Milan*)	609		492.6	20
Cairo (Abu Zabal) (Egypt)	620		483.9	20
Brussels, No. 1 (Belgium). (*French Programme*)	620		483.9	15
Lisbon (Bacarena) (Portugal)	629		476.9	15
Tröndelag (Norway)	629		476.9	20
Prague, No. 1 (Czechoslovakia)	638		470.2	120
Lyons, P.T.T. (La Doua) (France)	648		463	15
Cologne (Langenberg) (Germany)	658		455.9	100
North Regional (Slaithwaite)	668		449.1	50
Sottens (Radio Suisse Romande) (Switzerland)	677		443.1	25
Belgrade (Yugoslavia)	686		437.3	2.5
Paris, P.T.T. (Ecole Supérieure) (France)	695		431.7	7
Stockholm (Sweden)	704		426.1	55
Rome, No. 1 (Italy) (*S.-w. stn.*, 25.4 *m.*)	713		420.8	50
Kiev, RW9 (U.S.S.R.)	722		415.5	36
Tallinn (Esthonia)	731		410.4	20
Madrid, EAJ2 (Radio España) (Spain)	731		410.4	3
Munich (Germany)	740		405.4	100
Marseilles, P.T.T. (France)	749		400.5	1.6
Katowice (Poland)	758		395.3	12
Midland Regional (Daventry)	767		391.1	25
Toulouse, P.T.T. (France)	776		386.6	0.7
Leipzig (Germany)	785		382.2	120
Barcelona, EAJ1 (Spain)	795		377.4	5
Lwow (Poland)	795		377.4	16
Scottish Regional (Falkirk)	804		373.1	50
Milan (Italy)	814		368.6	50
Bucharest (Romania)	823		364.5	12
Moscow, No. 4, RW39 (Stalina) (U.S.S.R.)	832		360.6	100
Berlin (Funkstunde Tegel) (Germany)	841		356.7	100
Bergen (Norway)	850		352.9	1
Sofia (Bulgaria)	850		352.9	1
Valencia (Spain)	850		352.9	1.5
Simferopol, RW52 (U.S.S.R.)	859		349.2	10
Strasbourg, P.T.T. (France)	859		349.2	15
Poznan (Poland)	868		345.6	16
London Regional (Brookmans Park)	877		342.1	50
Graz (Austria). (*Relays Vienna*)	886		338.6	7
Limoges, P.T.T. (France)	895		335.2	0.5
Helsinki (Finland)	895		335.2	10
Hamburg (Germany)	904		331.9	100
Toulouse (Radio Toulouse) (France)	913		328.6	60
Brno (Czechoslovakia)	922		325.4	32
Brussels, No. 2 (Belgium). (*Flemish Programme*)	932		321.9	15
Algiers, P.T.T. (Radio Alger) (Algeria)	941		318.8	12
Göteborg (Sweden). (*Relays Stockholm*)	941		318.8	10
Breslau (Germany)	950		315.8	17
Paris (Poste Parisien) (France)	959		312.8	100
West Regional (Washford Cross)	977		307.1	50
Cracow (Poland)	986		304.3	2
Genoa (Italy). (*Relays Milan*)	986		304.3	10
Hilversum (Holland). (7 *kW.* till 6.40 p.m.)	995		301.5	20
Bratislava (Czechoslovakia)	1004		298.8	13.5
North National (Slaithwaite)	1013		296.2	50
Barcelona, EAJ15 (Radio Asociación) (Spain)	1022		293.5	3
Königsberg (Heilsberg Ermland) (Germany)	1031		291	60
Parede (Radio Club Portugués) (Portugal)	1031		291	5
Leningrad, No. 2, RW70 (U.S.S.R.)	1040		288.5	10
Scottish National (Falkirk)	1050		285.7	50
Bari (Italy)	1059		283.3	20
Tiraspol, RW57 (U.S.S.R.)	1068		280.9	4
Bordeaux, P.T.T. (Lafayette) (France)	1077		278.6	12
Zagreb (Yugoslavia)	1086		276.2	0.7
Falun (Sweden)	1086		276.2	2
Madrid, EAJ7 (Union Radio) (Spain)	1095		274	7
Madona (Latvia)	1104		271.7	50
Naples (Italy). (*Relays Rome*)	1104		271.7	1.5
Moravska-Ostrava (Czechoslovakia)	1113		269.5	11.2
Alexandria (Egypt)	1122		267.4	0.25
Belfast	1122		267.4	1
Nyiregyhaza (Hungary)	1122		267.4	6.2
Hörby (Sweden). (*Relays Stockholm*)	1131		265.3	10
Turin, No. 1 (Italy). (*Relays Milan*)	1140		263.2	7
London National (Brookmans Park)	1149		261.1	50
West National (Washford Cross)	1149		261.1	50
Kosice (Czechoslovakia). (*Relays Prague*)	1158		259.1	2.6
Monte Ceneri (Switzerland)	1167		257.1	15
Copenhagen (Denmark). (*Relays Kalundborg*)	1176		255.1	10
Kharkov, No. 2, RW4 (U.S.S.R.)	1185		253.2	10
Frankfurt (Germany)	1195		251	17
Prague, No. 2 (Czechoslovakia)	1204		249.2	5
Lille, P.T.T. (France)	1213		247.3	5
Trieste (Italy)	1222		245.5	10
Gleiwitz (Germany). (*Relays Breslau*)	1231		243.7	5
Cork (Irish Free State) (*Relays Athlone*)	1240		241.9	1
Juan-les-Pins (Radio Côte d'Azur) (France)	1249		240.2	2
Rome, No. 3 (Italy)	1258		238.5	1
San Sebastian (Spain)	1258		238.5	3
Nürnberg and Augsburg (Germany) (*Relay Munich*)	1267		236.8	2
Christiansand and Stavanger (Norway)	1276		235.1	0.5
Dresden (Germany) (*Relays Leipzig*)	1285		233.5	1.5
Aberdeen	1285		233.5	1
Austrian Relay Stations	1294		231.8	0.5
Danzig. (*Relays Königsberg*)	1303		230.2	0.5
Swedish Relay Stations	1312		228.7	1.25
Budapest, No. 2 (Hungary)	1321		227.1	0.8
German Relay Stations	1330		225.6	1.5
Montpellier, P.T.T. (France)	1339		224	5
Lodz (Poland)	1339		224	1.7
Dublin (Irish Free State) (*Relays Athlone*)	1348		222.6	1
Milan, No. 2 (Italy) (*Relays Rome*)	1348		222.6	4
Turin, No. 2 (Italy). (*Relays Rome*)	1357		221.1	0.2
Basle and Berne (Switzerland)	1375		218.2	0.5
Warsaw, No. 2 (Poland)	1384		216.8	2
Lyons (Radio Lyons) (France)	1393		215.4	5
Tampere (Finland)	1420		211.3	1.2
Paris, (Radio LL) (France)	1424		210.7	0.8
Newcastle	1429		209.9	1
Béziers (France)	1429		209.9	2
Miskolc (Hungary)	1438		208.6	1.25
Fécamp (Radio Normandie) (France)	1456		206	10
Pecs (Hungary)	1465		204.8	1.25
Bournemouth	1474		203.5	1
Plymouth	1474		203.5	0.3
International Common Wave	1492		201.1	0.1
International Common Wave	1500		200	0.6
Liepàja (Latvia)	1737		173	0.1

SHORT-WAVE STATIONS OF THE WORLD

(N.B.—Times of Transmission given in parentheses are approximate only and represent G.M.T.)

Metres.	kc/s.	Call Sign.	Station.	Tuning Positions.
70.2	4,273	RV15	Kharbarovsk (U.S.S.R.). (*Daily* 06.00 *to* 14.00.)	.....
58.31	5,145	OK1MPT	Prague (Czechoslovakia). (*Experimental*)	.....
50.27	5,968	HVJ	Vatican City. (*Daily* 19.00 *to* 19.15) ...	.....
50.0	6,000	RW59	Moscow (U.S.S.R.). (*Relays No.* 1 *Stn.*) (*Daily* 20.00 *to* 23.00.)	.....
50.0	6,000	EAJ25	Barcelona (Radio Club) (Spain). (*Sat.* 20.30 *to* 21.30.)	.....
49.96	6,005	VE9DN	Montreal (Canada). (*Daily* 04.30 *to* 05.00)	.....
49.83	6,020	DJC	Zeesen (Germany). (*Daily* 22.30 *to* 03.45, 17.00 *to* 21.45.)	.....
49.67	6,040	W1XAL	Boston, Mass. (U.S.A.). (*Daily* 22.45 *to* 00.15, *Sun.* 00.30 *to* 02.30 *also.*)	.....
49.67	6,040	W4XB	Miami Beach, Florida (U.S.A.)	.....
49.67	6,040	YDB	Sourabaya (Java). (*Daily* 03.30 *to* 06.30)	.....
49.59	6,050	GSA	Empire Broadcasting	.....
49.5	6,060	W8XAL	Cincinnati, Ohio (U.S.A.). (*Daily* 12.00 *to* 01.00, 04.00 *to* 06.00.)	.....
49.5	6,060	W3XAU	Philadelphia, Pa. (U.S.A.) (*Relays WCAU.*) (*Daily* 01.00 *to* 04.00.)	.....
49.5	6,060	VQ7LO	Nairobi (Kenya Colony). (*Daily* 16.00 *to* 19.00, *Sat. to* 20.00, *Mon., Wed., Fri.* 10.45 *to* 11.15 *also, Tues.* 08.00 *to* 09.00 *also, Thurs.* 13.00 *to* 14.00 *also.*)	.....
49.5	6,060	OXY	Skamlebaek (Denmark). (*Relays Kalundborg.*) (*Daily* 18.00 *to* 24.00.)	.....
49.43	6,069	VE9CS	Vancouver, B.C. (Canada). (*Sat.* 04.30 *to* 05.45, *Sun.* 16.00 *to* 04.00.)	.....
49.34	6,080	W9XAA	Chicago, Ill. (U.S.A.). (*Relays WCLF.*) (*Daily* 20.00 *to* 06.00.)	.....
49.22	6,095	VE9GW	Bowmanville, Ont. (Canada). (*Mon., Tues., Wed.* 20.00 *to* 05.00, *Thurs., Fri., Sat.* 12.00 *to* 05.00, *Sun.* 18.00 *to* 02.00.)	.....
49.2	6,097	ZTJ	Johannesburg (S. Africa). (*Daily ex. Sun.* 04.30 *to* 05.30, 08.30 *to* 12.00, 14.00 *to* 20.00 (*Sat. to* 21.45), *Sun.* 13.00 *to* 15.15, 17.30 *to* 20.00.)	.....
49.18	6,100	W3XAL	Bound Brook, N.Y. (U.S.A.). (*Relays WJZ.*) (*Mon., Wed., Sat.* 22.00 *to* 06.00.)	.....
49.18	6,100	W9XF	Chicago, Ill. (U.S.A.). (*Daily ex. Mon., Wed. and Sun.* 21.00 *to* 07.00.)	.....
49.1	6,109	VUC	Calcutta (India). (*Daily ex. Fri. and Sat.* 15.30 *to* 18.00, *Fri.* 14.30 *to* 15.00, *Sat.* 17.45 *to* 21.00.)	.....
49.05	6,115	IRA	Rome (Italy). (*Mon., Wed., Fri.* 23.00)...	.....
49.02	6,120	YDA	Bandoeng (Java). (*Daily* 03.30 *to* 06.30)	.....
49.02	6,120	W2XE	Wayne, N.J. (U.S.A.). (*Relays WABC.*) (*Daily* 23.00 *to* 04.00.)	.....
48.86	6,140	W8XK	Pittsburg, Pa. (U.S.A.). (*Relays KDKA.*) (*Daily* 21.30 *to* 06.00.)	.....
48.78	6,150	CJRO	Winnipeg (Canada). (*Daily* 00.00 *to* 05.00, *Sat.* 21.00 *to* 06.00 *also, Sun.* 22.00 *to* 03.30.)	.....
48.39	6,200	HJ3ABF	Bogota (Colombia)	.....
46.69	6,425	W3XL	Bound Brook, N.J. (U.S.A.). (*Experimental*)	.....
45.38	6,610	RW72	Moscow (U.S.S.R.). (*Relays Stalin Stn.*)...	.....
45.0	6,667	8KR	Constantine (Algeria)	.....
43.0	6,976	EA4AQ	Madrid (Spain). (*Tues. and Sat.* 22.00)...	.....
38.48	7,797	HBP	Radio Nations, Prangins (Switzerland). (*Sat.* 22.30 *to* 23.15.)	.....
37.33	8,035	CNR	Rabat (Morocco). (*Sun.* 20.00 *to* 22.30)...	.....
31.58	9,500	PRF5	Rio de Janeiro (Brazil). (*Daily* 22.30 *to* 23.15.)	.....
31.55	9,510	VK3ME	Melbourne (Australia). (*Wed.* 10.00 *to* 11.30, *Sat.* 10.00 *to* 12.00.)	.....
31.55	9,510	GSB	Empire Broadcasting	.....
31.48	9,530	W2XAF	Schenectady, N.Y. (U.S.A.). (*Relays WGY.*) (*Daily* 23.30 *to* 04.00.)	.....
31.45	9,540	LCL	Jelöy (Norway). (*Relays Oslo*)	.....
31.45	9,540	DJN	Zeesen (Germany). (*Daily* 08.45 *to* 12.15, 13.00 *to* 16.30, 22.15 *to* 03.45.)	.....
31.38	9,560	DJA	Zeesen (Germany). (*Daily* 13.00 *to* 16.30, 22.15 *to* 02.15, *Sun.* 09.00 *to* 10.30 *also.*)	.....
31.36	9,565	VUB	Bombay (India). (*Daily* 16.30 *to* 17.30)...	.....
31.35	9,570	W1XAZ	Springfield, Mass. (U.S.A.). (*Relays WBZ.*) (*Daily* 12.00 *to* 06.00.)	.....
31.32	9,580	GSC	Empire Broadcasting	.....
31.32	9,580	VK3LR	Lindhurst (Australia). (*Daily ex. Sun.* 08.15 *to* 12.30.)	.....
31.28	9,590	W3XAU	Philadelphia, Pa. (U.S.A.). (*Relays WCAU.*) (*Daily* 17.00 *to* 01.00.)	.....
31.28	9,590	VK2ME	Sydney (Australia). (*Sun.* 06.00 *to* 08.00, 10.00 *to* 16.00.)	.....
31.27	9,595	HBL	Radio Nations, Prangins (Switzerland). (*Sat.* 22.30 *to* 23.15.)	.....
31.25	9,600	CT1AA	Lisbon (Portugal). (*Tues., Thurs. and Sat.* 21.30 *to* 24.00.)	.....
31.0	9,677	CT1CT	Lisbon (Portugal). (*Thurs.* 21.00 *to* 23.00, *Sun.* 12.00 *to* 14.00.)	.....
30.67	9,780	IRO	Rome (Italy). (*Experimental*)	.....
30.43	9,860	EAQ	Madrid (Spain). (*Daily* 22.15 *to* 00.30, *Sat.* 18.00 *to* 20.00 *also.*)	.....
29.04	10,330	ORK	Ruysselede (Belgium). (*Daily* 19.45 *to* 21.15.)	.....
28.98	10,350	LSX	Buenos Aires (Argentina). (*Daily* 20.00 *to* 21.00.)	.....
25.6	11,720	FYA	Paris, Radio Coloniale (France). (*Colonial Stn. E-W.*) *Daily* 00.00 *to* 03.00, 04.00 *to* 06.00.)	.....
25.6	11,720	CJRX	Winnipeg (Canada). (*Daily* 00.00 *to* 05.00, *Sat.* 21.00 *to* 06.00 *also, Sun.* 22.00 *to* 03.30 *also.*)	.....
25.57	11,730	PHI	Eindhoven (Holland). (*Daily ex. Tues. and Wed.* 13.00 *to* 15.00 (*Sat. to* 15.30 ; *Sun. to* 16.00).)	.....
25.53	11,750	GSD	Empire Broadcasting	.....
25.49	11,770	DJD	Zeesen (Germany). (*Daily* 17.00 *to* 21.45)	.....
25.45	11,790	W1XAL	Boston, Mass. (U.S.A.). (*Daily* 23.00 *to* 00.30.)	.....
25.4	11,810	2RO	Rome (Prato Smeraldo) (Italy)	.....
25.36	11,830	W2XE	Wayne, N.J. (U.S.A.). (*Relays WABC.*) (*Daily* 20.00 *to* 22.00.)	.....
25.29	11,860	GSE	Empire Broadcasting	.....
25.27	11,870	W8XK	Pittsburg, Pa. (U.S.A.). (*Relays KDKA.*) (*Daily* 21.30 *to* 03.00.)	.....
25.23	11,880	FYA	Paris, Radio Coloniale (France). (*Colonial Stn. N-S.*) (*Daily* 16.15 *to* 19.15, 20.00 *to* 23.00.)	.....
25.0	12,000	RNE	Moscow (U.S.S.R.). (*Relays No.* 2 *Stn.*) (*Sun.* 03.00 *to* 04.00, 11.00 *to* 12.00, 15.00 *to* 16.00.)	.....
24.83	12,082	CT1CT	Lisbon (Portugal). (*Sun.* 14.00 *to* 16.00, *Thurs.* 20.00 *to* 21.00.)	.....
23.39	12,830	CNR	Rabat (Morocco). (*Sun.* 12.30 *to* 14.00)...	.....
19.84	15,123	HVJ	Vatican City. (*Daily* 10.00 *to* 10.15) ...	.....
19.82	15,140	GSF	Empire Broadcasting	.....
19.74	15,200	DJB	Zeesen (Germany). (*Daily* 08.45 *to* 12.15, *Sun.* 09.00 *to* 10.30 *also.*)	.....
19.72	15,210	W8XK	Pittsburg, Pa. (U.S.A.). (*Relays KDKA.*) (*Daily* 13.00 *to* 21.15.)	.....
19.71	15,220	PCJ	Eindhoven (Holland). (*Experimental*) ...	.....
19.68	15,243	FYA	Paris, Radio Coloniale (France). (*Colonial Stn. E.W.*) (*Daily* 12.00 *to* 16.00.)	.....
19.67	15,250	W1XAL	Boston, Mass. (U.S.A.). (*Daily* 15.50 *to* 18.30.)	.....
19.66	15,260	GSI	Empire Broadcasting	.....
19.64	15,270	W2XE	Wayne, N.J. (U.S.A.). (*Relays WABC.*) (*Daily* 16.00 *to* 18.00.)	.....
19.56	15,330	W2XAD	Schenectady, N.Y. (U.S.A.). (*Daily* 19.30 *to* 20.30.)	.....
17.33	17,310	W3XL	Bound Brook, N.J. (U.S.A.). (*Daily* 16.00 *to* 22.00.)	.....
16.89	17,760	DJE	Zeesen (Germany)	.....
16.87	17,780	W3XAL	Bound Brook, N.J. (U.S.A.). (*Relays WJZ.*) (*Daily* 15.00 *to* 21.00.)	.....
16.86	17,790	GSG	Empire Broadcasting	.....
13.97	21,470	GSH	Empire Broadcasting	.....
13.94	21,530	GSJ	Empire Broadcasting	.....
13.93	21,540	W8XK	Pittsburg, Pa. (U.S.A.). (*Daily* 12.00 *to* 19.00.)	.....

A Music Critic Speaks Out

The idea of testing the relative merits of loud speakers by concealing them behind a screen might be applied to violinists, in the opinion of "Amphion," music critic of the *Croydon Advertiser*, who addressed the Croydon Radio Society at a recent meeting. The lecturer thought that if a world-famous violinist and an unknown one were hidden behind a screen most of the audience would not find any very appreciable difference between the two.

The Society's interest in good reproduction was praised by the lecturer. He discouraged a certain type of radio salesmanship which persuaded the customer to buy an unsuitable wireless set which was excessively "boosted." He himself had heard commercial sets which were simply appalling, and only a firm hand had enabled him to purchase the one he wanted. He trembled when he thought that a large section of the public was having forced upon it apparatus far below the best. On January 29th next the Society will hold a dual loud speaker night. The Hon. Secretary is Mr. E. L. Cumbers, 14, Campden Road, South Croydon.

CLUB NEWS

For Manchester Short-wave Enthusiasts

The Manchester Chapter of the International Short-Wave Club is holding meetings during the present session on February 5th and 19th, March 5th and 19th, and April 2nd and 16th.

The clubroom is open for the use of members from 6.30 p.m., and for those interested morse instruction is given from 7.15 to 8 p.m. The ordinary meetings, with lectures and demonstrations, open at 8 o'clock. All readers interested in short-wave work are welcome at the meetings. Full particulars can be obtained on application to Mr. R. Lawton, 10, Dalton Avenue, Thatch Leach Lane, Whitefield, near Manchester.

Slade Radio Annual Dinner

The Fourth Annual Dinner of the Slade Radio Society was recently held at the Imperial Hotel, Temple Street, Birmingham, and was attended by members and friends as well as a large representation of the trade and Press. After a number of speeches, mostly humorous, the Cup in connection with the summer DF contest was presented to Mr. G. T. Peck. Mr. Chilvers, one of the founder members of the Society, was presented with an electric clock. All enquiries concerning the Society should be addressed to the Hon. Secretary, Mr. Charles Game, 40, West Drive, Heathfield Park, Handsworth, Birmingham.

MULLARD VALVE CAPS

THE modern tendency in valve design is for the familiar top terminal of the screen-grid type to be displaced by a metal thimble upon which a spring connector fits. It is announced that the Mullard VP2 and SP2 battery HF pentodes will shortly be supplied with the new top cap, but in order to make their use in existing sets easy each valve will be supplied with an adaptor. This is shown in the sketch and can be seen to consist of the usual clip connector fitted with a terminal for the attachment of the lead.